KENWOOD

HI/FI STEREO COMPONENTS

SERVICE MANUAL

KR-7050
(KR-7750)

An item of adjustment is written in three languages — English, French and German.

Un article sur réglages est écrit en trois langues, Anglais, Francais et Allemand.

Ein Artikel der Abgleich wird auf drei Sprachen, Englische, Französisch und Deutsch geschrieben.

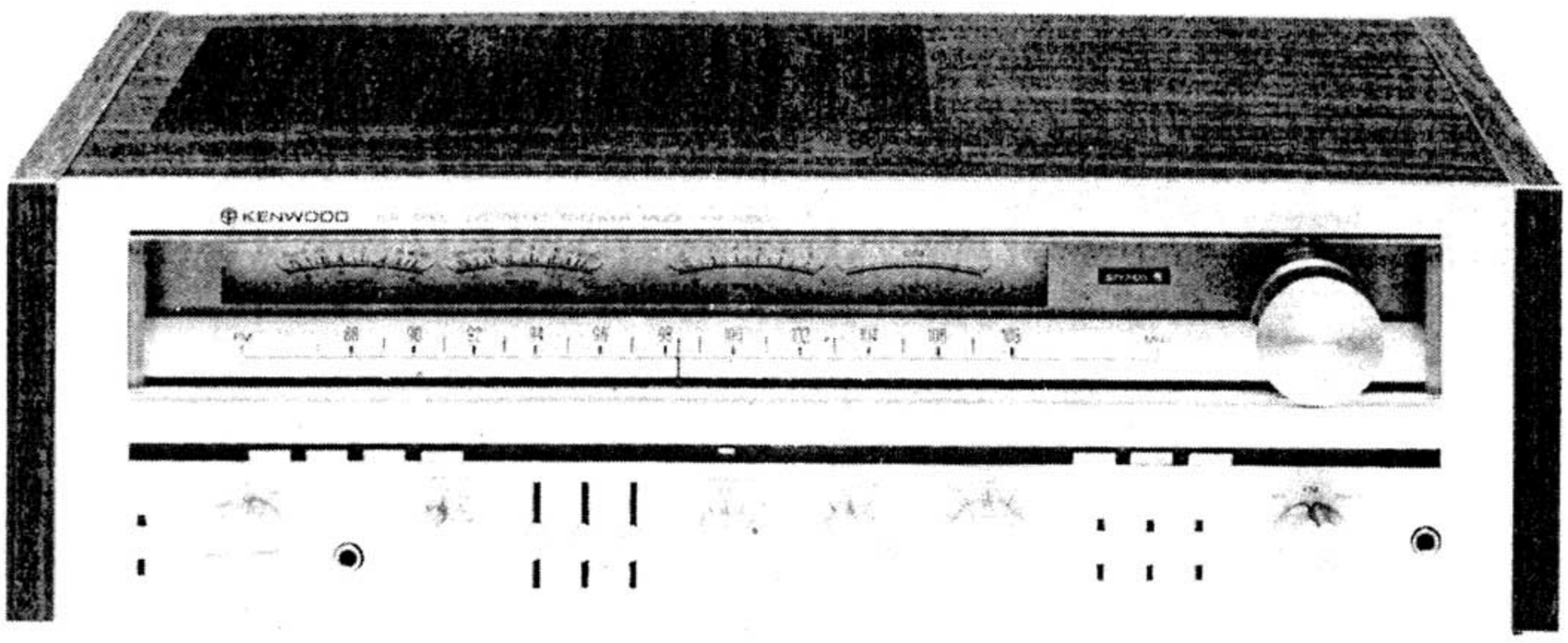

HIGH SPEED DC STEREO RECEIVER

CONTENTS

EXTERNAL VIEW 3
INTERNAL VIEW 4
DIAL CORD STRINGING 4
DISASSEMBLY FOR REPAIR 5
BLOCK & LEVEL DIAGRAM 6
ADJUSTMENT/REGLAGES/ABGLEICH 7
PC BOARD 12
SEMICONDUCTOR SUBSTITUTIONS 14
SCHEMATIC DIAGRAM 15
SPECIFICATIONS 15
PARTS LIST 16
EXPLODED VIEW 17

Note:

Component and circuitry are subject to modification to insure best operation under differing local conditions. This manual is based on, the U.S. (K) standard, and provides information on regional circuit modification through use of alternate schematic diagrams, and information on regional component variations through use of parts list.

Region	Code
U.S.A.	K
Canada	P
PX	U
Australia	X
Europe & Scandinavia	E
England	T
Other Areas	M
Audio Club (KR-7750)	H

EXTERNAL VIEW

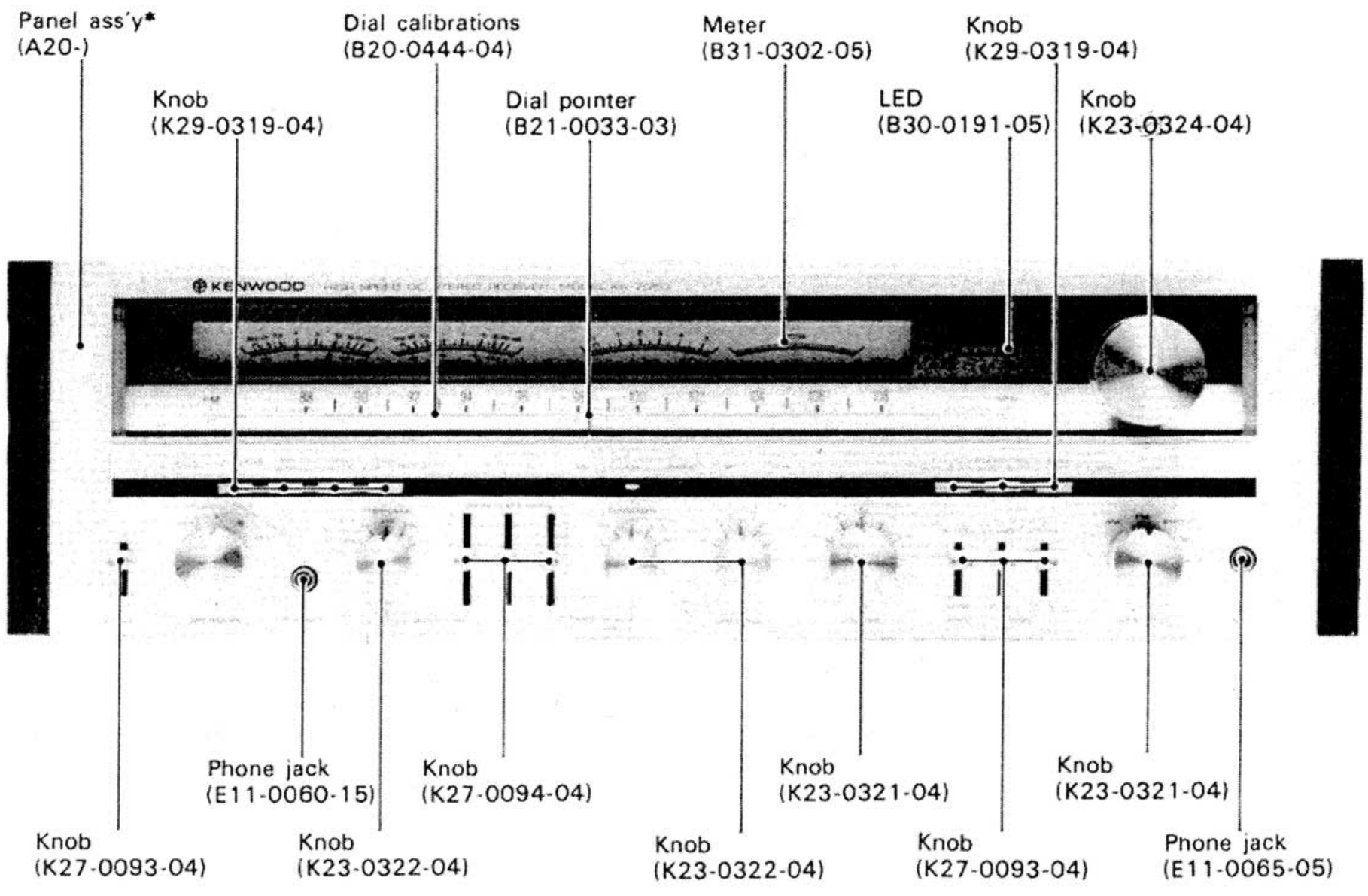

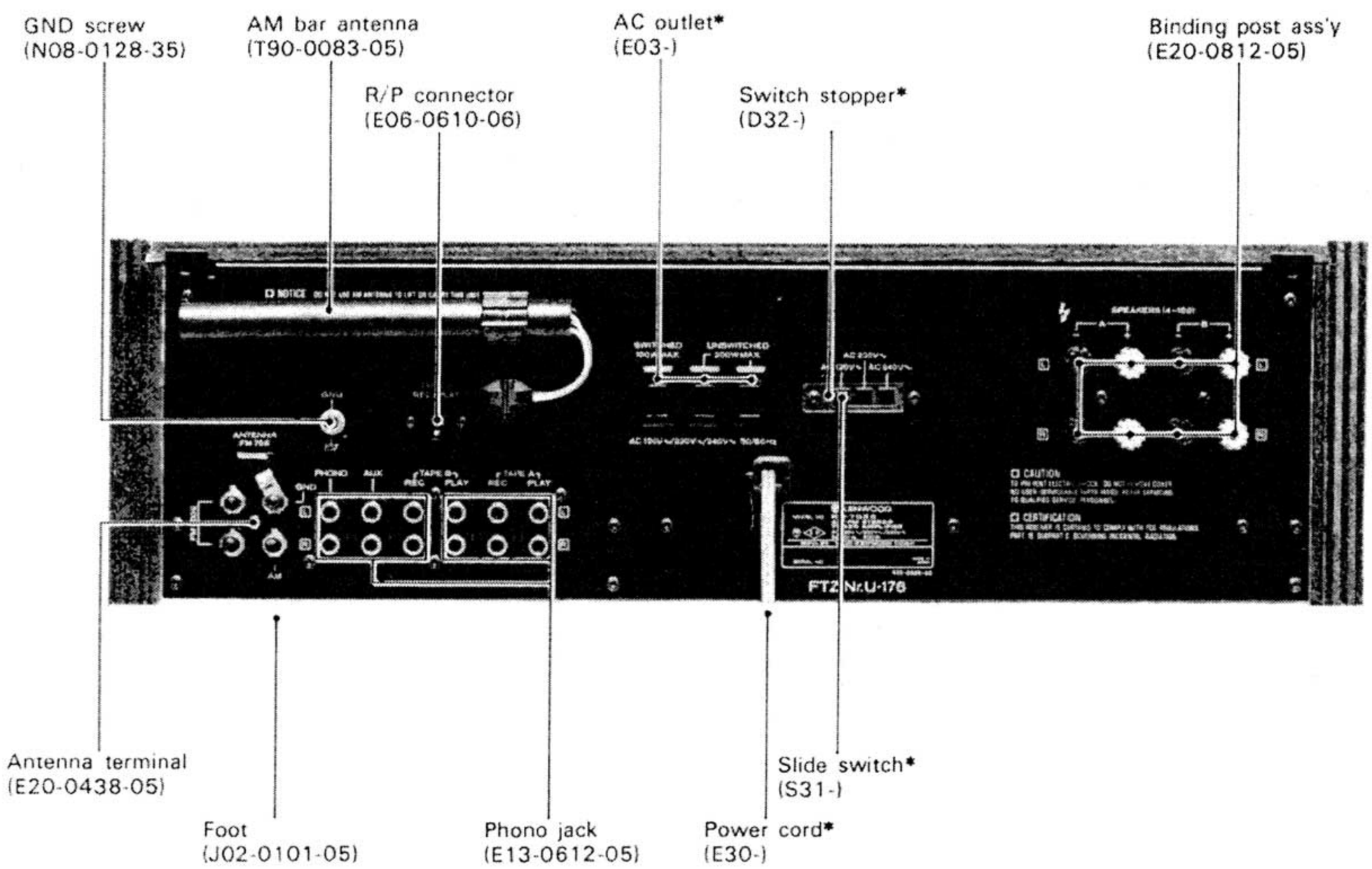

* Refer to Parts list

INTERNAL VIEW/DIAL CORD STRINGING

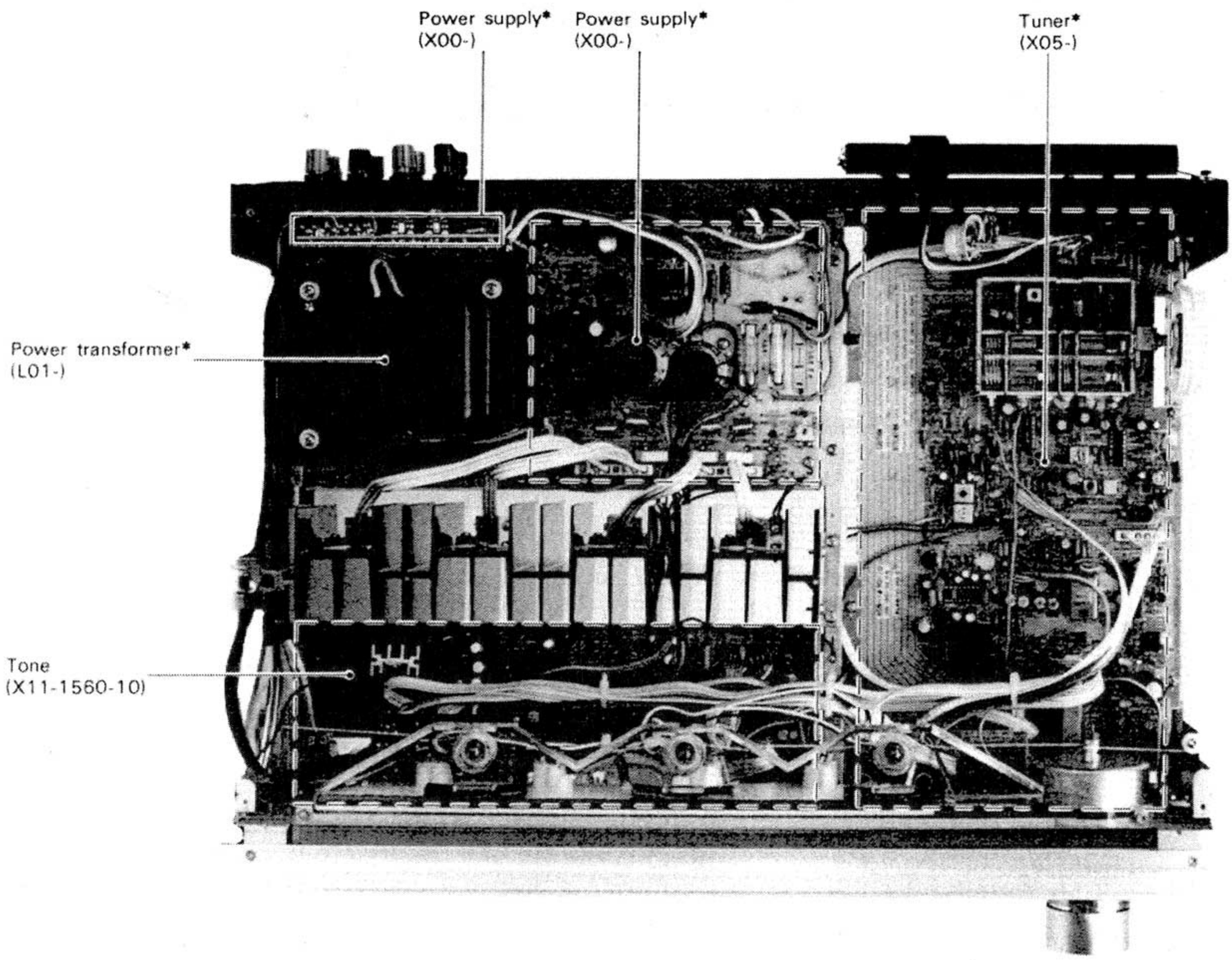

DIAL CORD STRINGING

1. Set the dial pulley as illustrated.
2. Tie the dial cord to the dial spring.
3. Hook the dial spring on the boss A.
4. Dress the dial cord in the direction of "1" to "2".
5. Wind the dial cord two turns around the dial shaft starting from its lower side.
6. Dress the dial cord in the direction of "3" through "7".
7. Wind the dial cord two and a half turns around the dial pulley starting from its lower side.
8. Tie the end of the dial cord to the dial spring.
9. Remove the dial spring from the boss A.
10. Receive a 90 MHz signal, and then mount the dial pointer at the 90 MHz position of the dial calibrations.

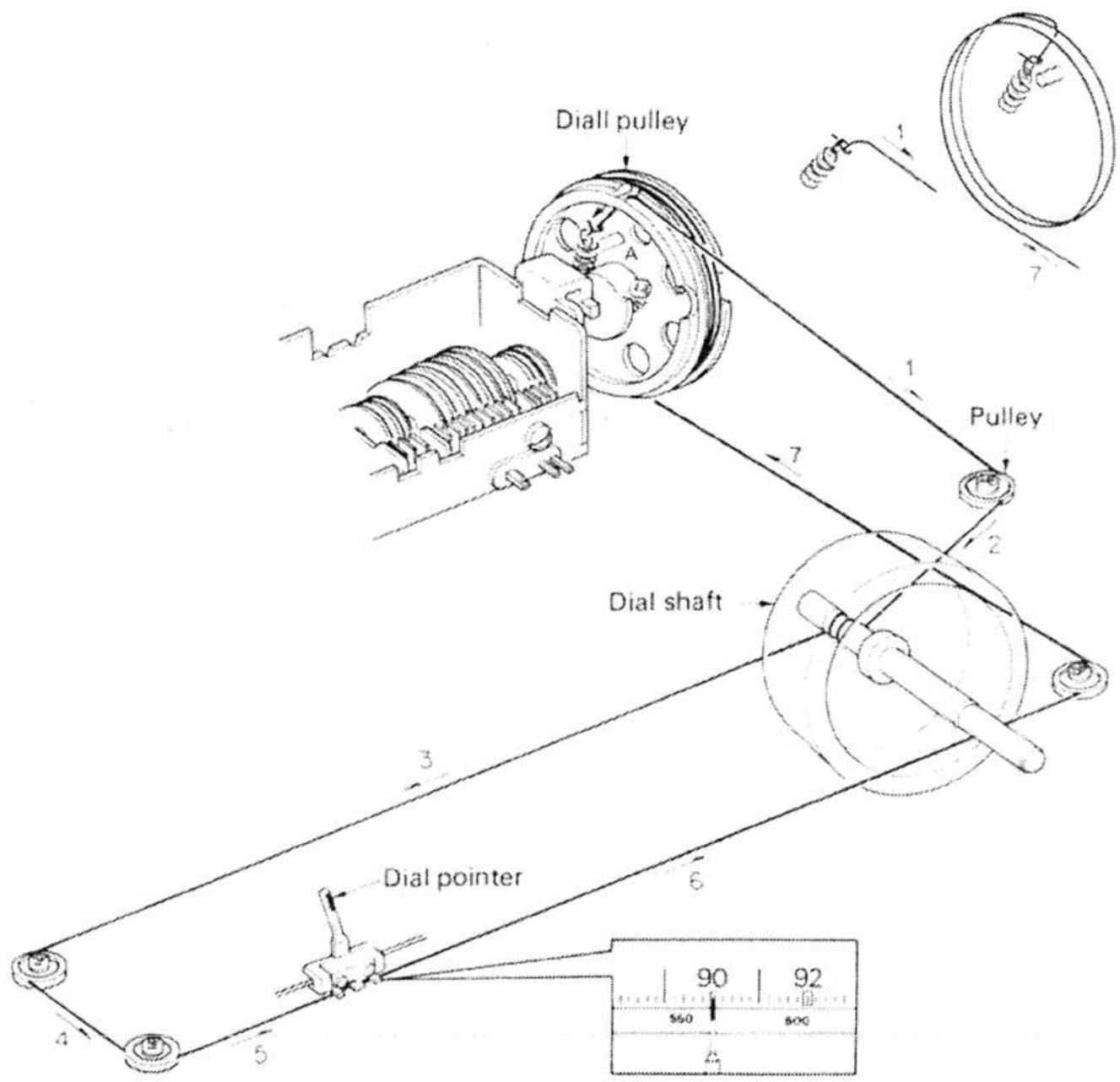

DISASSEMBLY FOR REPAIR

1. TOP PLATE

1. Remove the top plate stoppers.
2. Pull out the top plate in the direction of the arrow.

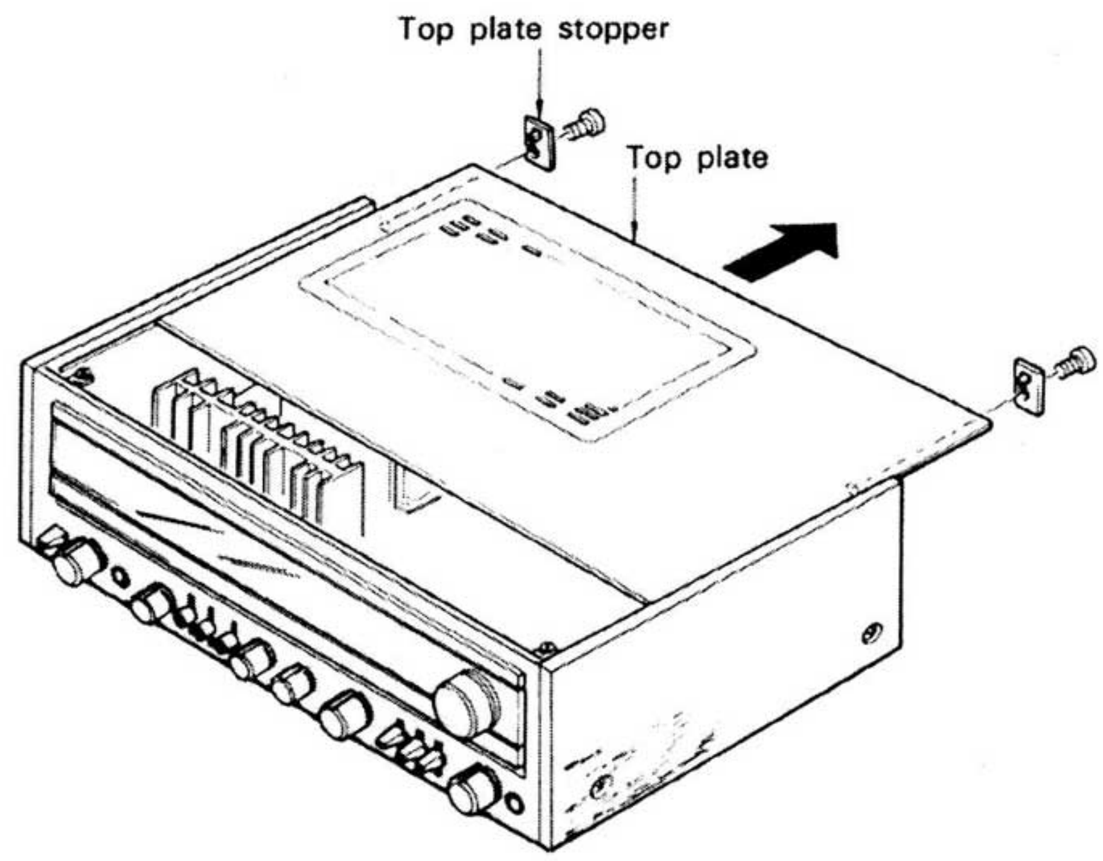

2. POWER AMP (X00-2050-10)

1. Remove the screws fixing the heat sink to the chassis.

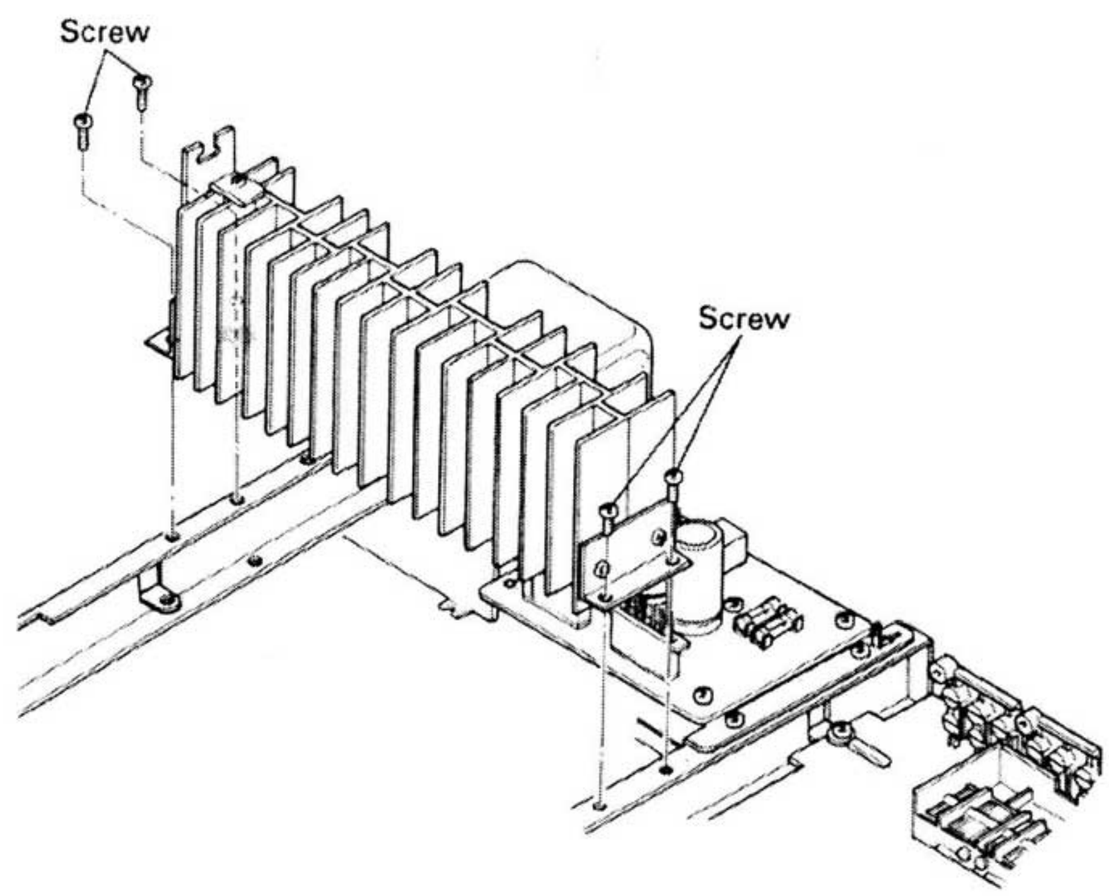

3. POWER SUPPLY SECTION OF AUDIO AMP

1. Remove the screws fixing the PC board to the chassis.
2. Push the PCB holder as illustrated.
3. Decline the PC board in the direction of the arrow.

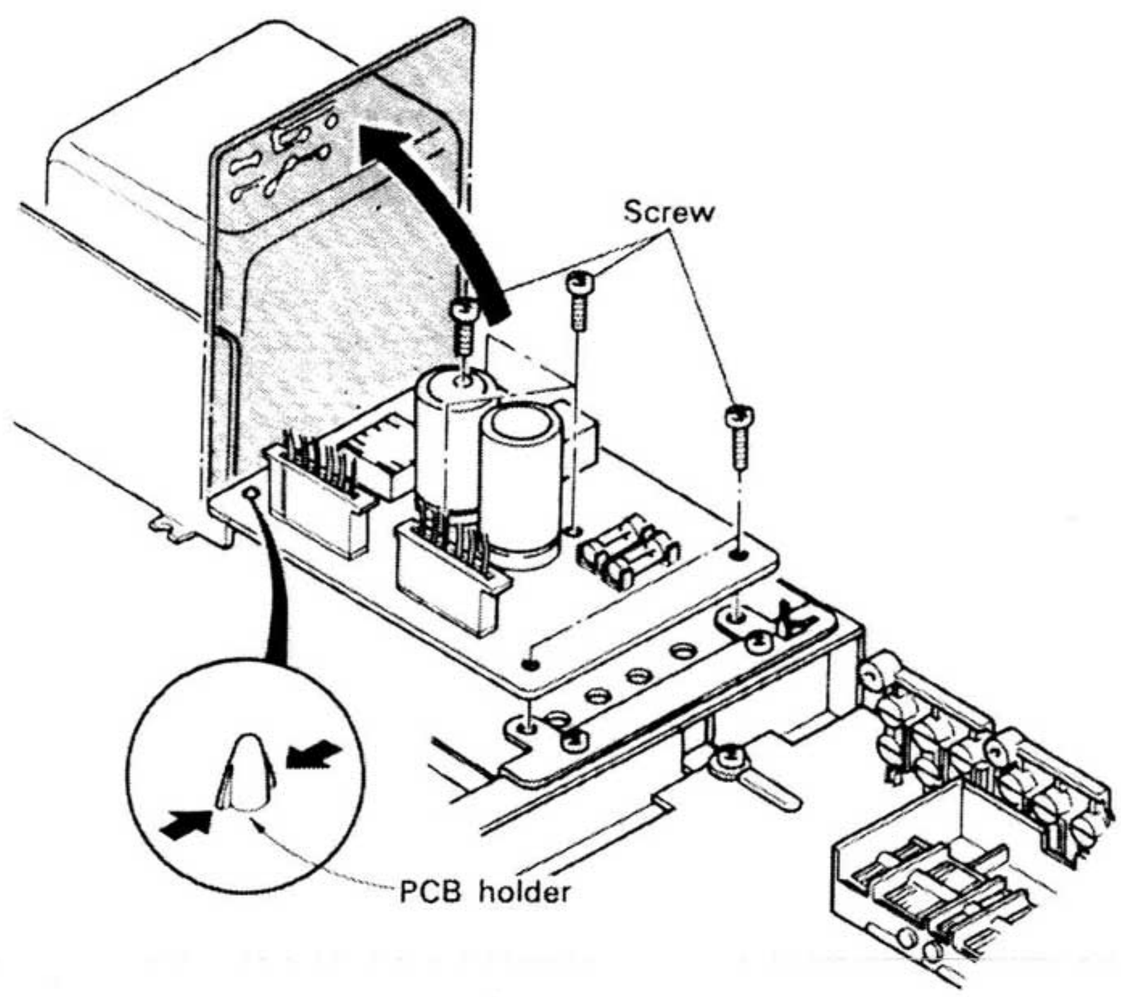

BLOCK DIAGRAM/LEVEL DIAGRAM

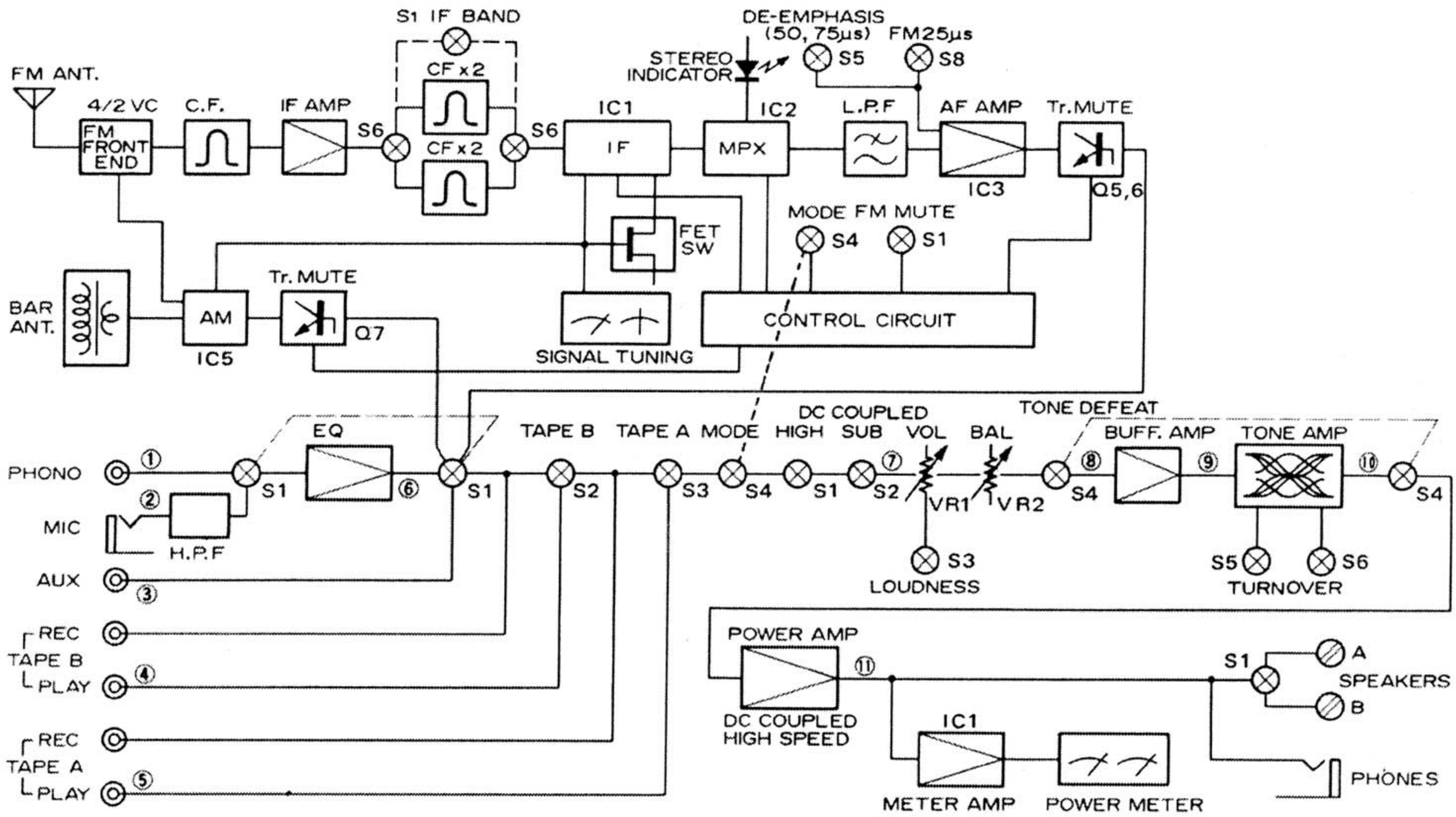

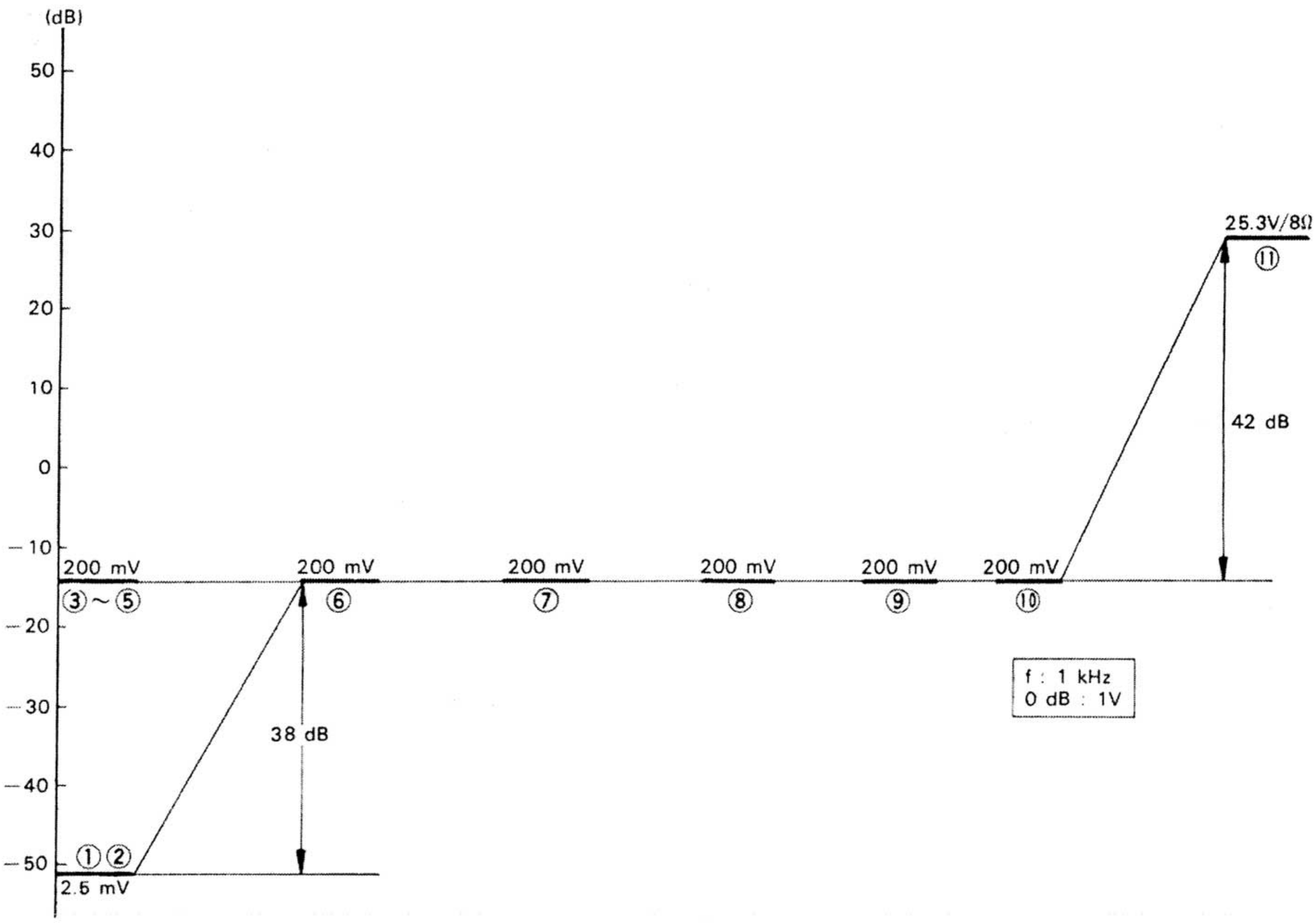

ADJUSTMENTS

NO.	ALIGNMENT	TEST EQUIPMENTS		RECEIVER SETTING	OUTPUT INDICATOR	ADJUSTMENT POINTS	REMARKS
		CONNECTION	SETTING				
FM							
1	DISCRIMI-NATOR (1)	Ⓐ	95 MHz 1 kHz, ±75 kHz Dev	95 MHz, WIDE	Ⓑ	—	*1
2	DISCRIMI-NATOR (2)	ditto	95 MHz 1 kHz, ±75 kHz Dev 60 dB (Receiver input)	ditto	T meter	L3	T meter pointer to be center.
3	DISCRIMI-NATOR (3)	ditto	ditto	ditto	Ⓑ	L4	Minimum distortion
Repeat alignments "1 ~ 3" several times.							
4	VCO	Ⓐ	95 MHz 0 Dev 60 dB (Receiver input)	95 MHz, WIDE	Frequency counter to the crosspoint of R45 and VR1	VR1	76 kHz ±200 Hz
5	SEPARA-TION	Ⓒ	95 MHz *2 1 kHz, ±68.25 kHz Dev SELECTOR: L or R 60 dB (Receiver input)	ditto	Ⓑ	VR3	*3
6	IFT	ditto	95 MHz 1 kHz, ±68.25 kHz Dev SELECTOR: L+R 60 dB (Receiver input)	ditto	ditto	T1 (W02-0022-05)	Minimum distortion
7	PILOT CANCEL	ditto	95 MHz 60 dB Pilot signal	ditto	ditto	VR2	Minimum output
AM							
1	IFT	Ⓓ	1,000 kHz 400 Hz, 30% Mod	1,000 kHz	Ⓑ	L6	Maximum deflection
2	TRACKING (1)	ditto	600 kHz 400 Hz, 30% Mod	600 kHz	ditto	L5 Bar antenna	ditto
3	TRACKING (2)	ditto	1,400 kHz 400 Hz, 30% Mod	1,400 kHz	ditto	CT1, CT2	ditto
4	9 kHz FILTER	ditto	100 kHz 9 kHz 30% Mod	1,000 kHz	ditto	L9	Minimum deflection

*** 1**
Adjust the tuning knob so that the same amount of noise is observed at the top and bottom of the output waveform with a weak signal

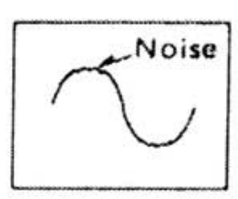

*** 2**
Set deviation to ±68.25 kHz with selector in L+R position
Set deviation of pilot signal to 6.75 kHz (9%)

*** 3 Minimum output**
A compromise adjustment may be required if left-to-right and right-to-left separations are unequal.

*** 4 FM front end**
The FM front end section is completely adjusted in the factory and further adjustment is not necessary. When the transistor and/or FET are replaced, perform the following adjustment.

(1) Set FM-SG to 108 MHz, 1 kHz Mod, ±75 kHz Dev and connect it to the antenna terminal of the receiver.
(2) Set the dial pointer at 108 MHz.
(3) Adjust TC0 so that T meter gives a mid-scale reading.
(4) Adjust TCA, TCR1 and TCR2 so that S meter deflects maximum.

When the FM front end section cannot be repaired by replacing semiconductors and taking steps in "(1)~(4)", replace the front end PCB ass'y (W02-0022-05) and do the following.

(1) Set FM-SG to 90 MHz, 1 kHz Mod, ±75 kHz, 60 dB and connect it to the antenna terminal of the receiver.
(2) Receive the FM-SG signal.
(3) Fix the dial pointer at 90 MHz.

RÉGLAGES

NO.	ALIGNMENT	APPAREILLAGE		RÉGLAGE DU AMPLI-TUNER	INDICATEUR DE SORTIE	POINTS DE RÉGLAGES	REMARQUES
		RACCORD-MENT	RÉGLAGE				
SECTION MF							
1	**DISCRIMI-NATEUR (1)**	Ⓐ	95 MHz 1 kHz (MOD) ±75 kHz (DEV)	95 MHz WIDE	Ⓑ	—	*1
2	**DISCRIMI-NATEUR (2)**	idem	95 MHz 1 kHz (MOD) ±75 kHz (DEV) 60 dB (Niveau d'entrée du ampli-tuner)	idem	Indicateur à zéro central	L3	Aiguille de l'indicateur à zéro central en position
3	**DISCRIMI-NATEUR (3)**	idem	idem	idem	Ⓑ	L4	Distorsion minimale
Repéter les points 1 ~ 3 plusierus fois.							
4	**OSCILLA-TEUR 76 kHz**	Ⓐ	95 MHz 0 (DEV) 60 dB	95 MHz WIDE	Relier le volt-mètre CC au plot R45 et VR1	VR1	76 kHz ±200 Hz
5	**SÉPARA-TION**	Ⓒ	95 MHz *2 1 kHz (MOD) ±68,25 kHz (DEV) L ou R (SELECTION) 60 dB	idem	Ⓑ	VR3	*3
6	**TFI**	idem	95 MHz 1 kHz (MOD) ±68,25 kHz (DEV) L+R (SELECTION) 60 dB	idem	idem	T1 (W02-0022-05)	Distorsion minimale
7	**CIRCUIT SUPPRESSION DE SIGNAL PILOTE**	idem	95 MHz 60 dB Signal pilote	idem	idem	VR2	Déviation maximale
SECTION MA							
1	**TFI**	Ⓓ	1.000 kHz 400 Hz, 30% (MOD)	1.000 kHz	Ⓑ	L6	Déviation maximale
2	**ALIGNMENT (1)**	idem	600 kHz 400 Hz, 30% (MOD)	600 kHz	idem	L5 Antenna ferrite MA	idem
3	**ALIGNMENT (2)**	idem	1.400 kHz 400 Hz, 30% (MOD)	1.400 kHz	idem	CT1, CT2	item
4	**FILTRE 9 kHz**	idem	1.000 kHz 9 kHz, 30% (MOD)	1.000 kHz	idem	L9	Déviation minimale

*** 1**

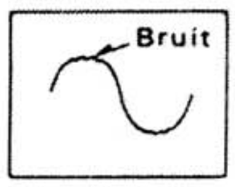

Ajuster le bouton d'accord de façon que la même quantité du bruit puisse être observé au sommet et en bas de la forme d'onde de sortie sous des conditions d'alimentation de signal faible.

*** 2**

Régler la déviation à ±68,25 kHz avec le sélecteur en position L+R (gauche+droite). Régler la déviation du signal pilote à 6,75 kHz (9%).

*** 3 Sortie minimale**

Si la sortie la droit de diaphonie et la gauche ne sont cieest pas même regler le potentiomètre ajustable pour que la tension de sortie est même.

*** 4 Partie frontale FM**

La partie frontale FM a été parfaitement réglée en usine et aucun réglage supplémentaire n'est requis.

Si l'on remplace le transistor et/ou FET, il convient d'effectuer le réglage suivant:

(1) Régler FM-SG sur 108 MHz, 1 kHz mod, ±75 kHz Dev et connecter à la borne d'antenne du ampli-tuner.
(2) Régler l'aiguille du cadran à 108 MHz.
(3) Ajuster TCO de façon que l'indicateur à zéro central donne une lecture à mi-échelle.
(4) Ajuster TCA, TCR1 et TCR2 de façon que l'indicateur de champ dévie au maximum.

Si la partie frontale FM ne peut pas être réparée en remplaçant les semi-conducteurs et en procédant suivant les indications dans (1)~(4), remplacer l'assemblage PCB de la partie frontale (W02-0022-05) et effectuer les opérations suivantes:

(1) Régler FM-SG à 90 MHz, 1 kHz Mod, ±75 kHz, 60 dB et le connecter à la borne d'antenne du récepteur
(2) Recevoir la signal FM-SG.
(3) Fixer l'aiguille du cadran à 90 MHz.

ABGLEICH

NR.	ABGLEICH	PRÜFEINRICHTUNG		STEUER-GERÄT EINSTEL-LUNG	AUSGANGS-ANZEIGE	EINSTELL-PUNKT	BEMER-KUNGEN
		ANSCHLÜSSE	EINSTELLUNG				
UKW-EMPFANGSABTEILUNG							
1	**DISKRIMI-NATOR (1)**	Ⓐ	95 MHz 1 kHz, ±75 kHz Hub	95 MHz WIDE	Ⓑ	—	*1
2	**DISKRIMI-NATOR (2)**	dito	95 MHz 1 kHz, ±75 kHz Hub 63 dB (Steuergerät-Eingangspegel)	dito	Kanalmitten Anzeiger	L3	Den zeiger des Kanalmitten Anzeiger mittig einstellen.
3	**DISKRIMI-NATOR (3)**	dito	dito	dito	Ⓑ	L4	Minimaler klirrfaktor
Abstimmungen „1 bis 3" mehrer Male wiederholen.							
4	**SPANNUNGS-GEREGELTER OSZILLATOR**	Ⓐ	95 MHz 0 Hub 60 dB	95 MHz WIDE	Frequenzzähler zum Kreuzungs-Punkt von R45 und VR1	VR1	76 kHz ±200 Hz
5	**STEREO KANAL TRENNUNG**	Ⓒ	95 MHz *2 1 kHz, ±68,25 kHz Hub Wähler: L oder R 60 dB	dito	Ⓑ	VR3	*3
6	**ZF-T**	dito	95 MHz 1 kHz, ±68,25 kHz Hub Wähler: L+R 60 dB	dito	dito	T1 (W02-0022-05)	Minimaler Klirrfaktor
7	**PILOTTON-UNTER-DRÜCKUNG**	dito	95 MHz 60 dB Pilotton	dito	dito	VR2	Minimaler Ausschlag
MW-EMPFANGSABTEILUNG							
1	**ZF-1**	Ⓓ	1.000 kHz 400 Hz, 30% Mod	1.000 kHz	Ⓑ	L6	Maximaler Ausschlag
2	**EMPFANGS-BEREICH (1)**	dito	600 kHz 400 Hz, 30% Mod	600 kHz	dito	L5 MW-Ferritangenna	dito
3	**EMPFANGS-BEREICH (2)**	dito	1.400 kHz 400 Hz, 30% Mod	1.400 kHz	dito	CT1, CT2	dito
4	**9 kHz-FILTER**	dito	1.000 kHz 9 kHz 30% Modulation	1.000 kHz	dito	L9	Minimaler Ausschlag

*** 1**
Den Abstimmknopf so eintellen, daß an der oberen und unteren Grenze der Auspangswellenform bei schwachem Signal desselbe Geräusch auftritt

*** 2**
Hub mit dem Wahlschalter auf L+R auf 68,25 kHz einstellen. Hub des Kontrollsignals auf 6,75 kHz (9%) einstellen.

*** 3 Minimaler Ausschalg**
Wenn dem Übersprechanteil des linken Kanals in den richten Kanal und dem Übersprechanteil des richten Kanals in den linken Kanal ungleich sind, eine kompromißabgleichung wird geforden.

*** 4 UKW-Frontende**
Das UKW-Frontende wird bereits im Werk vollständig eingestellt. Weitere Einstellung ist daher nicht nötig.
Beim Auswechseln des Transistors und/oder des FETs die Einstellung wie folgt vornehmen.

(1) Den UKW-Signalgenerator auf 108 MHz, 1 kHz Modulation und ±75 kHz Hub einstellen und mit der Antennenklemme des steuergeräts verbinden.
(2) Den Skalenzeiger auf 108 MHz stellen.
(3) TCO so einstellen, daß der Kanalmitten anzeiger in der Mitte ausschlägt.
(4) TCA, TCR1 und TCR2 so einstellen, daß das Feldstärkeinstrument das Maximum anzeigt.

Wenn das UKW-Frontende durch Auswechseln der Halbleiter und/oder durch in Abschnitt „1~4" genannten Schritte nicht repariert werden kann, ist die Leiterplatte (W02-0022-05) des Frontendes auszwechseln und folgende Einstellung vorzunehmen:

(1) Den UKW-Signalgenerator auf 90 MHz, 1 kHz Modulation ±75 kHz Hub, und 60 dB einstellen und mit der Antennenklemme des Steuergeräts verbinden.
(2) Den Steuergeräts so einstellen, daß das Meßsender-signal empfangen wird, während der Skalenzeiger auf, 90 MHz zeigt.

ADJUSTMENTS/RÉGLAGES

OFFSET VOLTAGE ADJUSTMENT

1. Set the SPEAKERS switch to A and the volume to min.
2. Connect the DC voltmeter between the positive and negative speaker terminals.
3. Adjust the trimming pot VR7 (VR6), as shown in figure 1, for 1 0V reading of the DC voltmeter.

RÉGLAGE DE LA TENSION DE DECLAGE (OFFSET)

1. Régler SPEAKERS interrupteur au A et Volume au min.
2. Brancher le voltmètre de C.C. aux bornes de sortie + et —.
3. Régler le potentiomètre ajustable VR7 (VR6) pour que la tension de sortie soit nulle, comme le montre ce figure 1.

BIAS CURRENT ADJUSTMENT

1. Turn the volume control knob fully counter clockwise.
2. Connect the DC voltmeter between the adjusting points, 19 and 20 (21 and 22) of power amp pc board ass'y (X00-2050-10).
3. Adjust the BIAS CURRENT trimming pot VR1 (VR2), for an 13 mV reading of the voltmeter.

RÉGLAGE DU COURANT DE POLARISATION

1. Tourner le bouton de commande de volume à fond dans le sens invers de celui des aiguilles d'une montre.
2. Brancher le voltmètre de C.C. aux points d'alignement, 19 et 20 (21 et 22), sur la plaque circuit imprimè d'ampli de puissance (X00-2050-10).
3. Régler le potentiomètre ajustable VR1 (VR2) de façon à ce que le voltmètre de C.C. indique 13 mV.

POWER METER LEVEL ADJUSTMENT

1. Connect an AG and dummy load to Aux jack and speaker terminal respectively.
2. Connect an AC voltmeter across the dummy load.
3. Adjust the trimming pot VR3 (VR4), when the AC voltmeter indicating, 4.9V, for 3W reading of power meter.

RÉGLAGE DU VU METRE

1. Relier un AG (générateur de signaux audio) sur les prises Aux et une fausse charge (Resistance) sur les bornes de haut-parleur.
2. Relier un voltmètre de C.A. aux deux extrémités de la resistance (ou aux borne de sortie + et —).
3. Régler le potentiomètre ajustable VR3 (VR4) en sortie que le VU mètre indique 3W lorsque le voltmètre indique 4.9V.

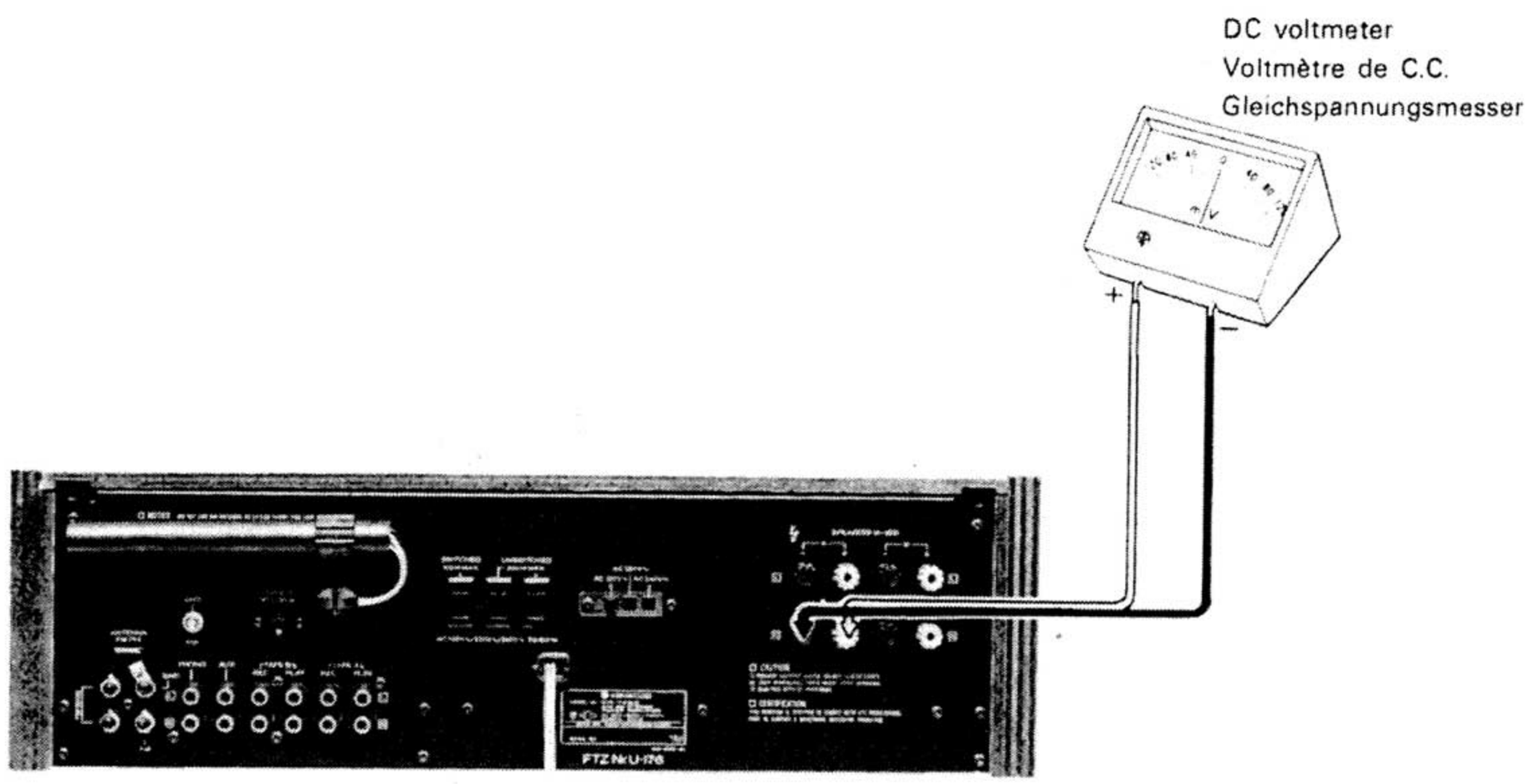

Fig. 1 OFFSET

ADJUSTMENTS/RÉGLAGES/ABGLEICH

TEST INSTRUMENT	APPAREILLAGE	PRÜFINSTRUMENTE	
Oscilloscope	Oscilloscope	Oszilloskop	SCOPE
AM signal generator	Générateur MA	MW-Signalgenerator	AM-SG
FM signal generator	Générateur MF	UKW-Signalgenerator	FM-SG
Audio generator	Générateur audio fréquences	NF-Signalgenerator	AG
AC voltmeter	Volltmètre CA	Wechselspannungsmesser	SSVM
FM multiplex generator	Générateur multiplex stéréo	UKW-Multiplexgenerator	FM-MPX
Frequency counter	Fréquencemètre	Frequenzzähler	
DC voltmeter	Voltmètre CC	Gleichspannungsmesser	
Distortion meter	Distorsiomètre	Klirrfakformesser	
Dummy antenna	Antenna fictive	Antennennackbildung	

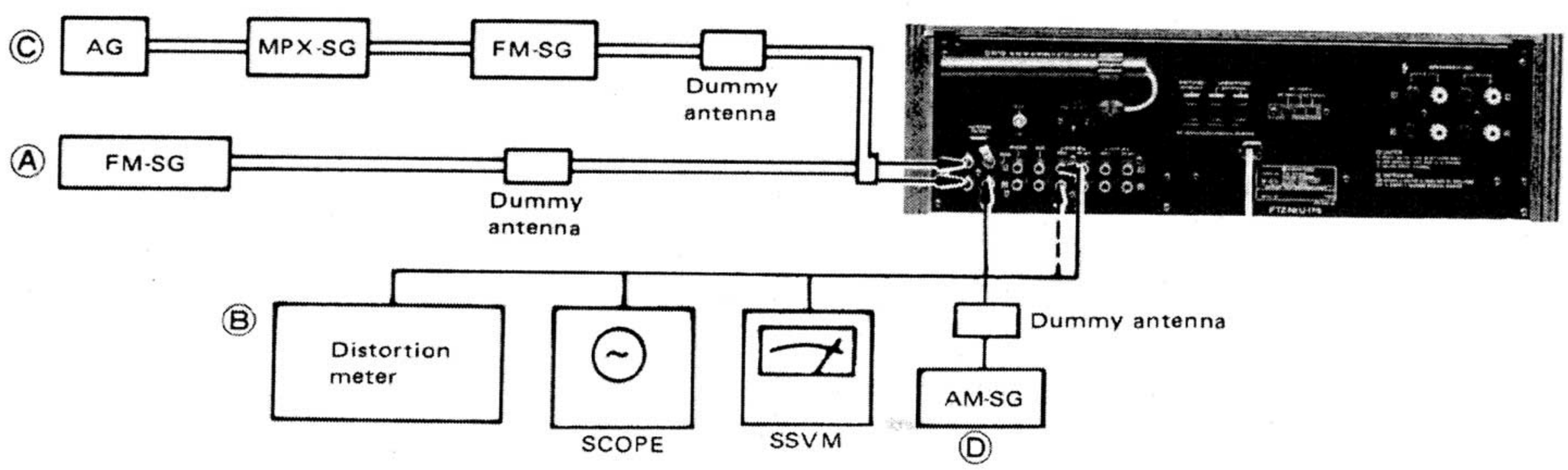

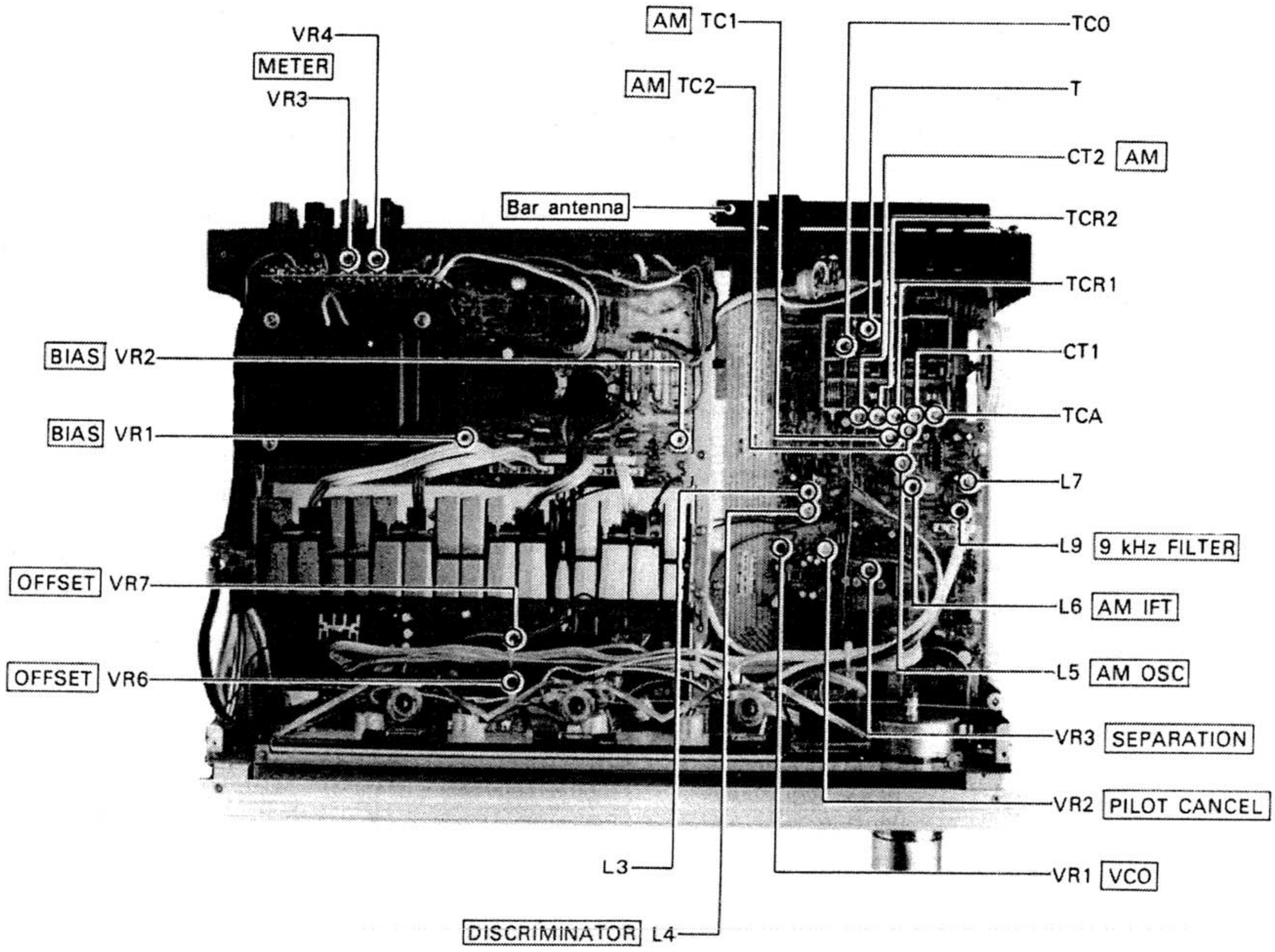

ABGLEICH

OFFSET-SPANNUNG

1. Den Schalter SPEAKERS auf A und den Volume auf min einstellen.
2. Einen Gleichspannungsmesser an der klemme SPEAKERS A anschließen. (Abb. 1).
3. Die Regelstange durch das Unterplattenloch einführen und den halbeingebetteten Widerstand VR7 (VR6) so regulieren, daß die Gleichspannungsmesser-Ablesung 0V ist.

LEERLAUFS

1. Den Lautstärkeregler (VOLUME) drehen um die Leistungsverstärker-Aufnahme auf Null zu reduzieren.
2. Den Gleichspannungsmesser zwischen der Regulierungs-Punkte ⊕ und ⊖ der Leistungsverstärker anschließen.
3. Den halbeingebetteten Widerstand VR1 (VR2) der Leis tungsverstärker so regulieren, daß die Gleichspannungsmesser-Ablesung 13 mV ist.

PEGELEINSTELLUNG DES STROMMESSERS (POWER METER)

1. Einen AG (NF-Signalgenerator) an die AUX-Buchsen und eine künstliche Last (8Ω, 20W oder mehr) an die Lautsprecher-Anschlüss anschließen.
2. Einen Wechselstrom-Voltmeter über die künstliche Last anschliessen.
3. Den AG auf 1 kHz einstellen.
4. Die Laustärke regler (oder den AG-Ausgang) so einstellen, daß der Voltmeter anzeigt.
5. Das Trimm-Potentiometer VR3 (VR4) so einstelle, das der Strommesser 3W anzeigt.

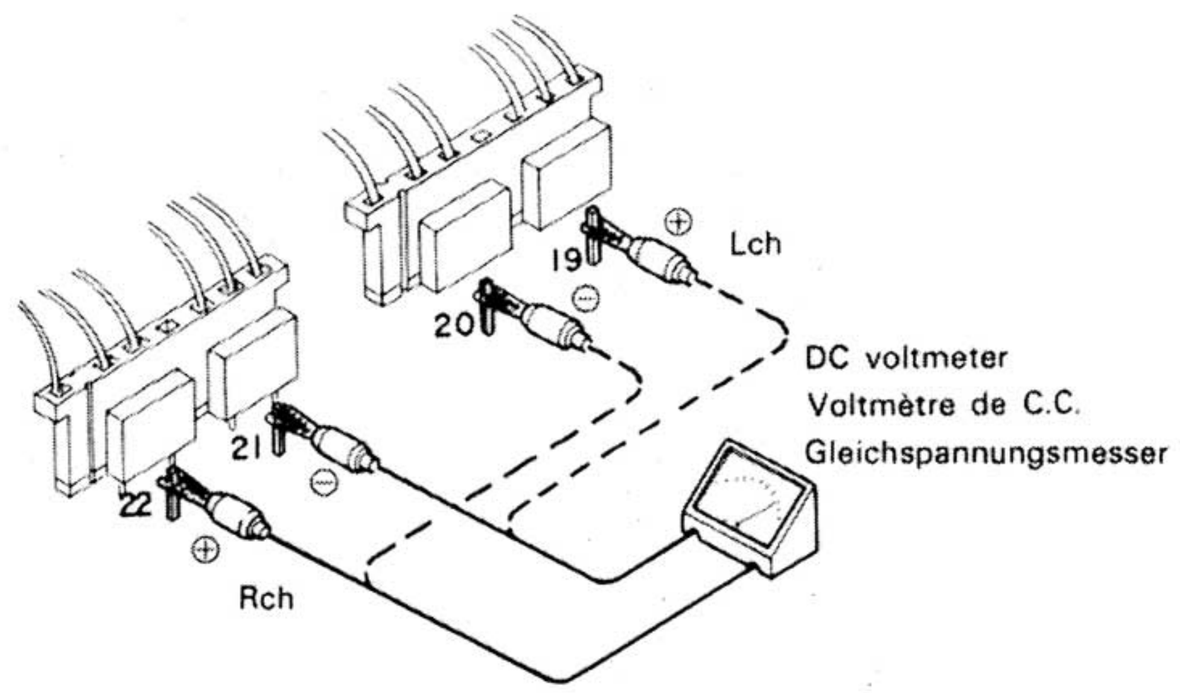

Fig. 2 BIAS CURRENT

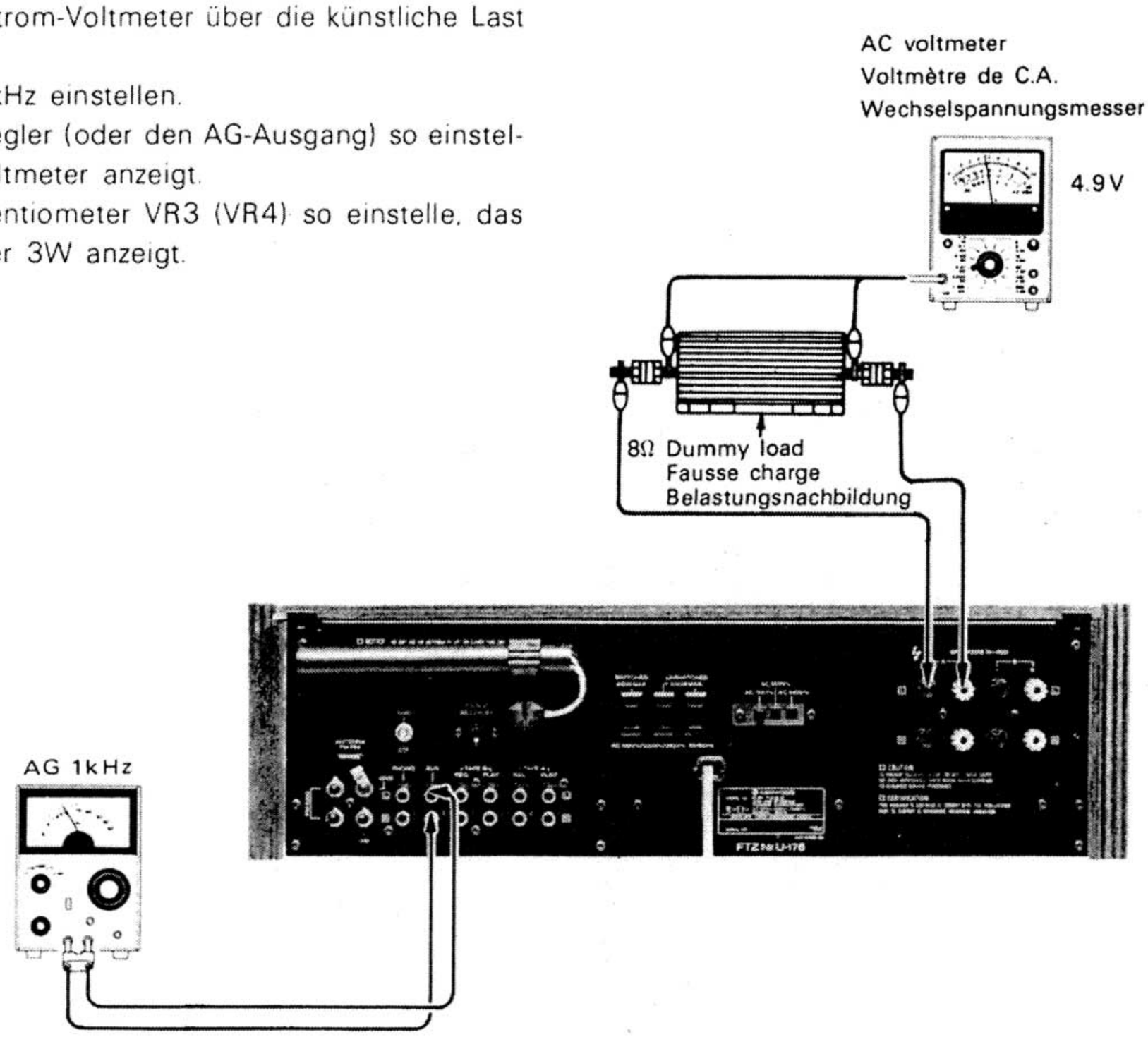

Fig. 3 POWER METER

PC BOARD

▼ POWER AMP (X00-2050-10) COMPONENT SIDE VIEW

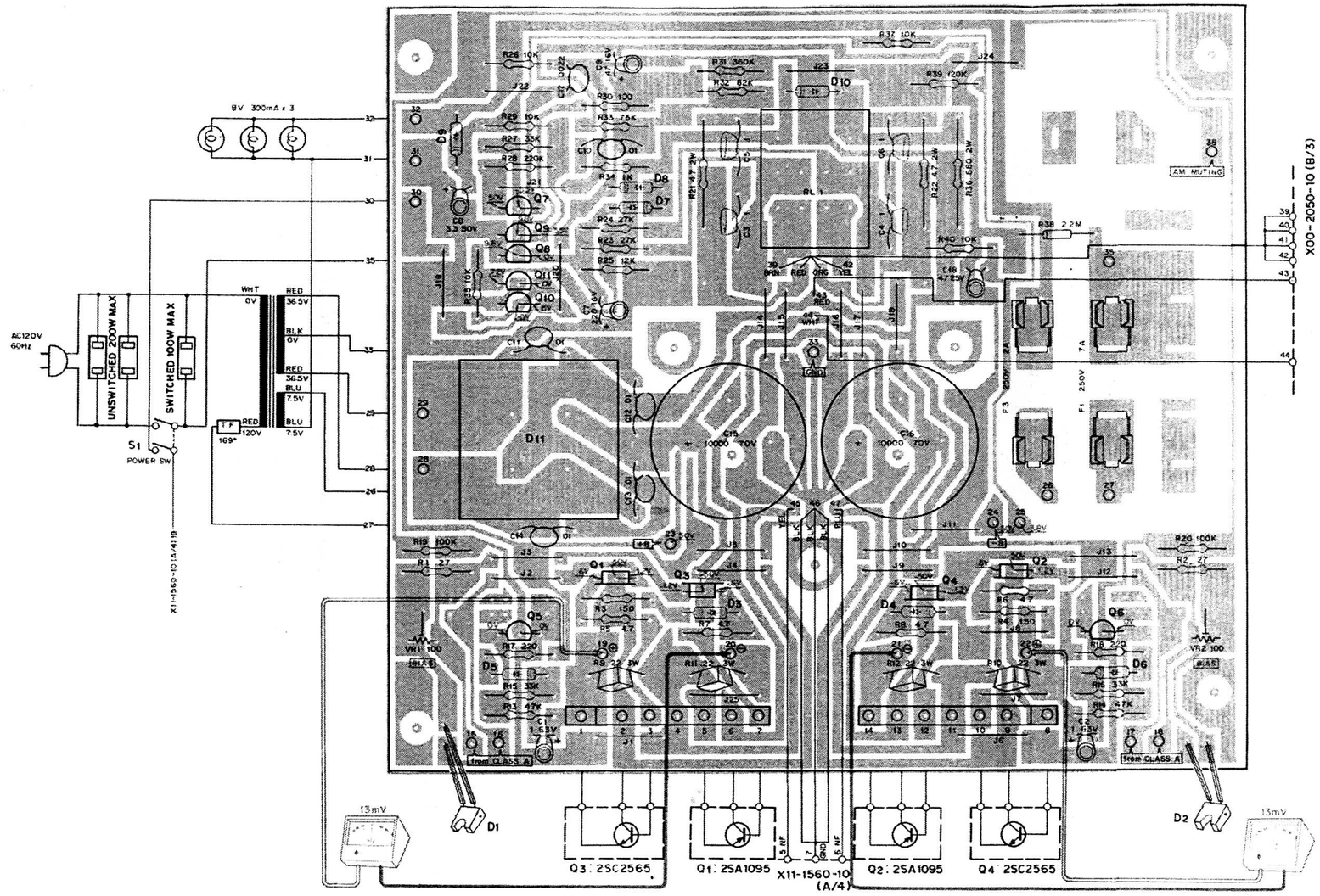

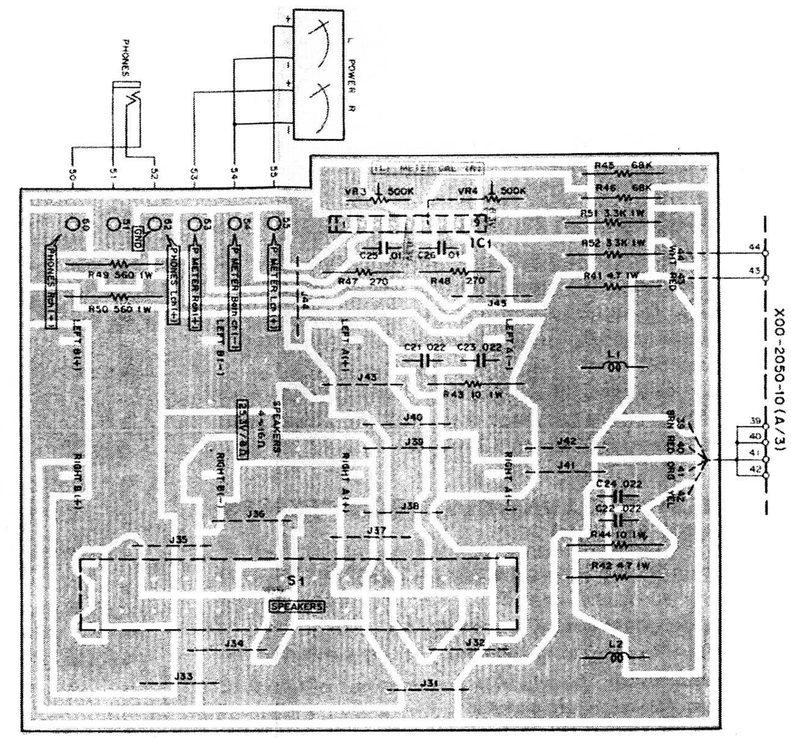

Q1, 2:	2SC1913 (Q, R)	2SA954 2SA984 2SA1023 2SB725 2SC828A	2SC945 2SC1845 2SC1890 2SC2378
Q3, 4:	2SA913 (Q, R)		
Q5, 6:	2SC1845 or 2SC1890A		
Q7:	2SA1023 or 2SB725		
Q8, 9:	2SC945 or 2SC828A		
Q10:	2SC2378 or 2SD767		
Q11:	2SA954 or 2SA984K		
IC1:	TA7318P		
D1, 2:	STV-4H (G)		
D3, 4, 7 ~ 9:	1S2076 or 1S1555		
D5, 6:	1S2076A		
D10:	W06B or V06B		
D11:	M4C-51-12* 1		

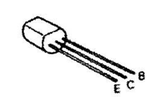

2SA913
2SC1913
2SD767

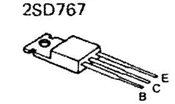

TA-7318P

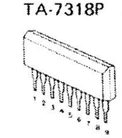

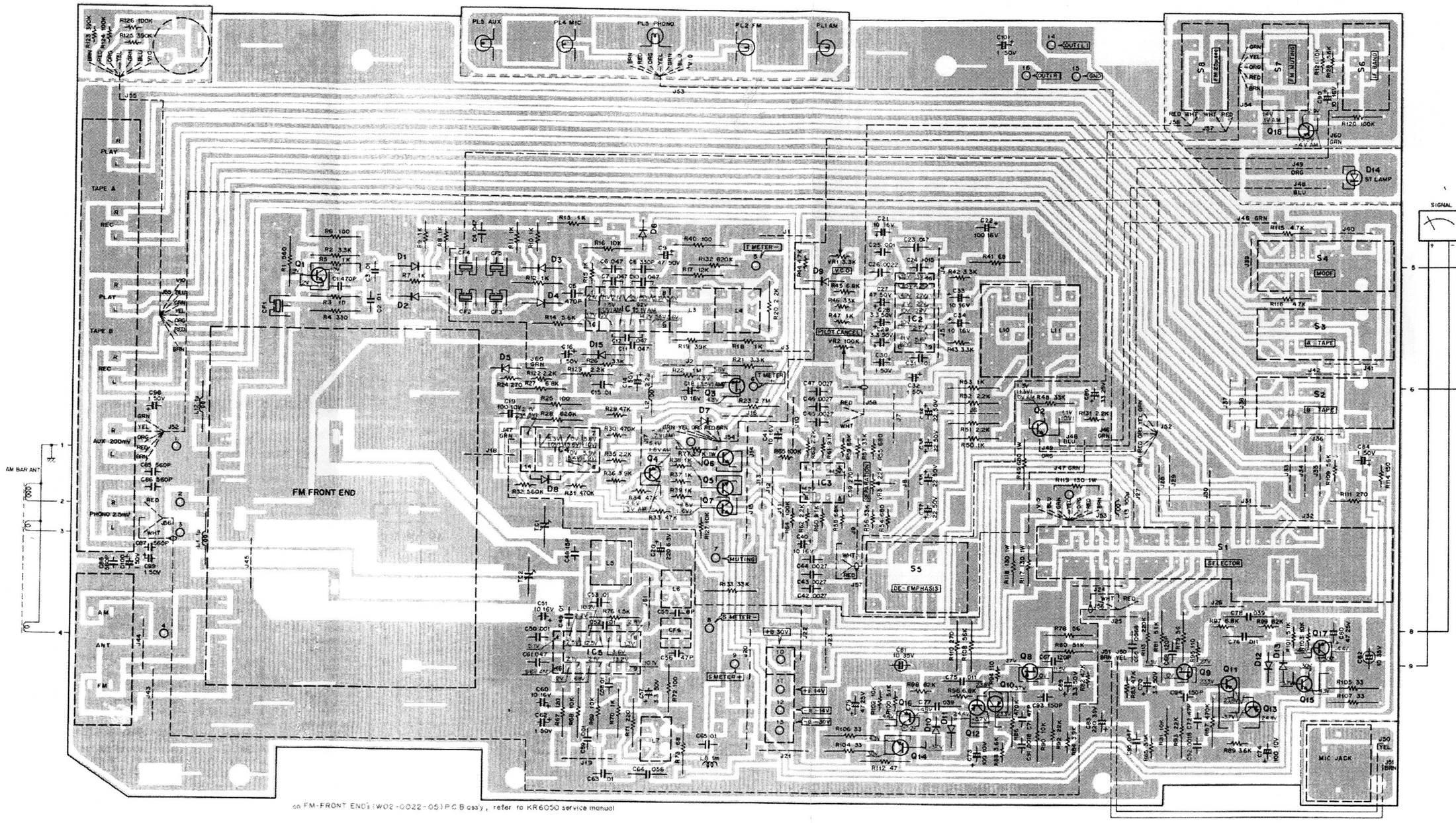

on FM-FRONT END (W02-0022-05) P.C.B. assy, refer to KR6050 service manual

2SA564
2SA733
2SA992
2SA1023
2SB725
2SC828A
2SC945
2SC1923
2SC2378
2SD655

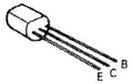

2SD767

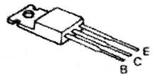

2SK136
2SK163

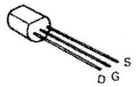

HA11223W

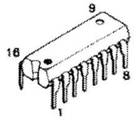

NJM4558D

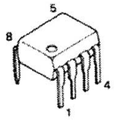

Q1:	2SC1923 (Q, R)	Q10～13, 16, 17:	2SA1023 (R, Q) or	IC3:	NJM4558D (A)	D3～13, 15:	1S2067 or
Q2, 7:	2SC945 (P, Q, K) or		2SB725	IC4:	TC4069UBP or		1S1555
	2SC828A (Q, R, S)	Q14, 15	2SC2378 (R, Q) or		MC14069UBPC or	D14:	GD-4-207RD
Q3:	2SK163 (N) or		2SD767		μPD4069C		
	2SK136 (S)	Q18:	2SA733 (A) or	IC5:	HA1197 or		
Q4:	2SA992 (E, F)		2SA564A		LA1240		
Q5, 6:	2SD655 (E, F)	IC1:	HA11225	D1, 2:	1N60		
Q8, 9:	2SK163 (L)	IC2:	HA11223W				

PC BOARD/SEMICONDUCTOR SUBSTITUTIONS

▼ TONE (X11-1560-10) FOIL SIDE VIEW

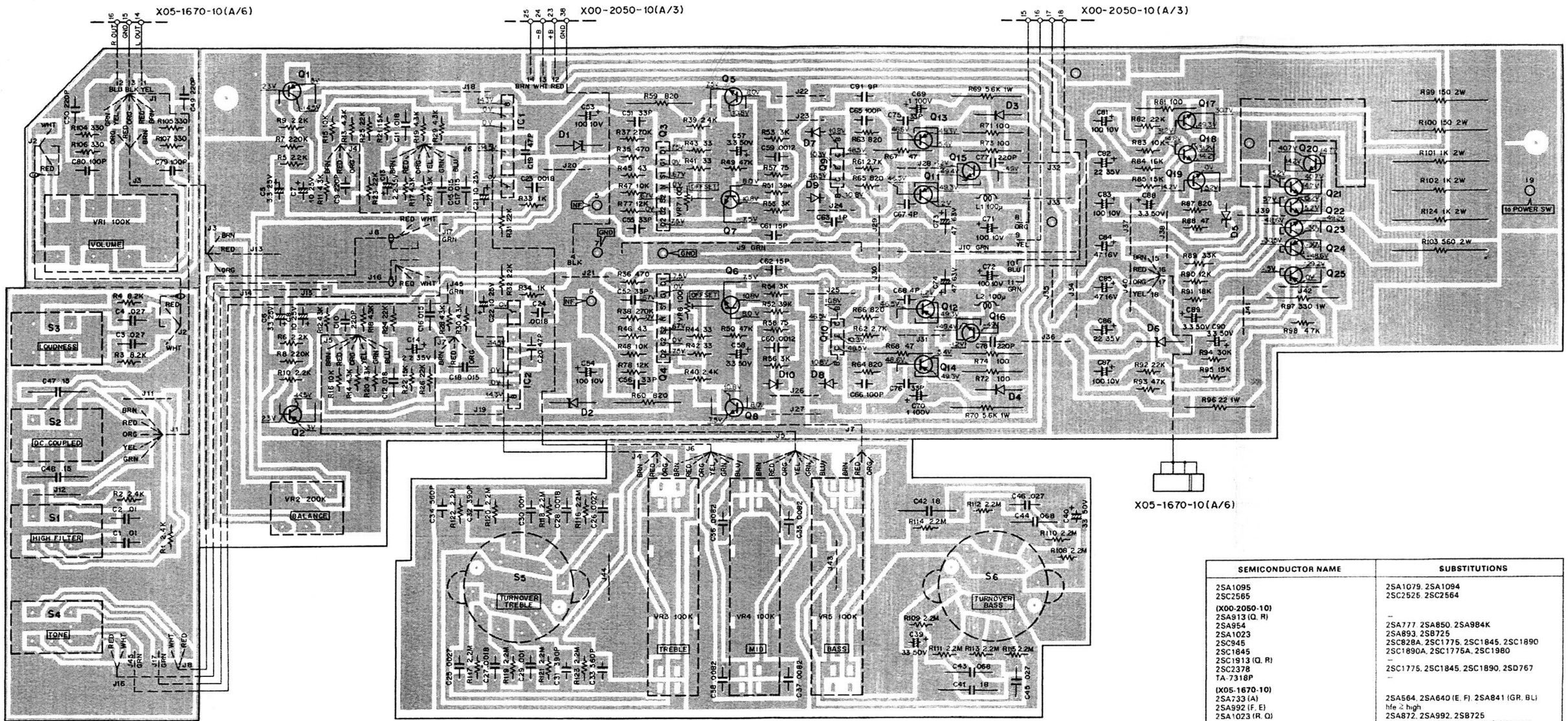

Q1, 2:	2SA992 (E, F) or 2SA872	Q20:	2SD762 or 2SD330
Q3, 4:	μPA68H (L, M)	Q23:	2SC1567
Q5 ~ 8:	2SC1845 (E, F) or 2SC1775	Q24, 25:	2SA733 (A)
Q9, 10:	2SC2259 (F, G)	IC1, 2:	HA1457
Q11 ~ 14:	2SA899 (B, V)	D1, 2, 5:	XZ-051
Q15, 16:	2SC1904 (B, V)	D3, 4:	1S2076 or 1S1555
Q17:	2SC1509 (Q, R)	D6:	WZ-140 or YZ-140
Q18, 19, 21, 22:	2SC945 (Q, P)	D7 ~ 10:	1N60

2SA733
2SA872
2SA992

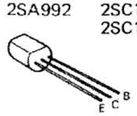

2SC945
2SC1509
2SC1775
2SC1845

2SA899
2SC1567
2SC1904

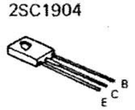

2SD330
2SD762

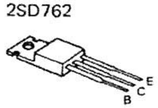

HA1457

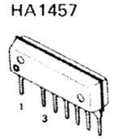

μPA68H

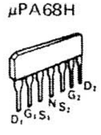

2SC2259

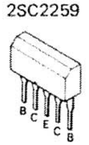

SEMICONDUCTOR NAME	SUBSTITUTIONS
2SA1095	2SA1079, 2SA1094
2SC2565	2SC2525, 2SC2564
(X00-2050-10)	
2SA913 (Q, R)	—
2SA954	2SA777, 2SA850, 2SA984K
2SA1023	2SA893, 2SB725
2SC945	2SC828A, 2SC1775, 2SC1845, 2SC1890
2SC1845	2SC1890A, 2SC1775A, 2SC1980
2SC1913 (Q, R)	—
2SC2378	2SC1775, 2SC1845, 2SC1890, 2SD767
TA-7318P	—
(X05-1670-10)	
2SA733 (A)	2SA564, 2SA640 (E, F), 2SA841 (GR, BL)
2SA992 (F, E)	hfe ≧ high
2SA1023 (R, Q)	2SA872, 2SA992, 2SB725
2SC945	VCE ≧ 50v, IC ≧ 100 mA, PC ≧ 250 mW
2SC1923	2SC535 (A, B), 2SC381 (R, O)
2SC2378 (R, Q)	2SC1775, 2SC1845, 2SD767
2SD655 (E, F)	—
2SK163 (L)	—
2SK163 (N)	2SK136 (S)
TC4069UBP	MC14069UBCP, μPD4069C
NJM4558D (A)	NJM4559, NJM4558D (B)
HA11225	—
HA11223W	—
HA1197	LA1240
(X11-1560-10)	
2SA733 (A)	2SA640, 2SA872, 2SA893, 2SA992
2SA899 (B, V)	—
2SA992 (F, E)	2SA640, 2SA872
2SC945 (Q, P)	2SC1222, 2SC1400, 2SC1845, 2SC1890
2SC1509 (Q, R)	2SC1735
2SC1567	2SC1567A, 2SD330, 2SD762
2SC1845 (F, E)	2SC1222, 2SC1400, 2SC1775
2SC1904 (B, V)	—
2SC2259 (F, G)	—
2SD762	2SD330
μPA68H (L, H)	2SK150A
HA1457	—

KENWOOD

HIGH SPEED DC STEREO RECEIVER

(KR-7750) KR-7050

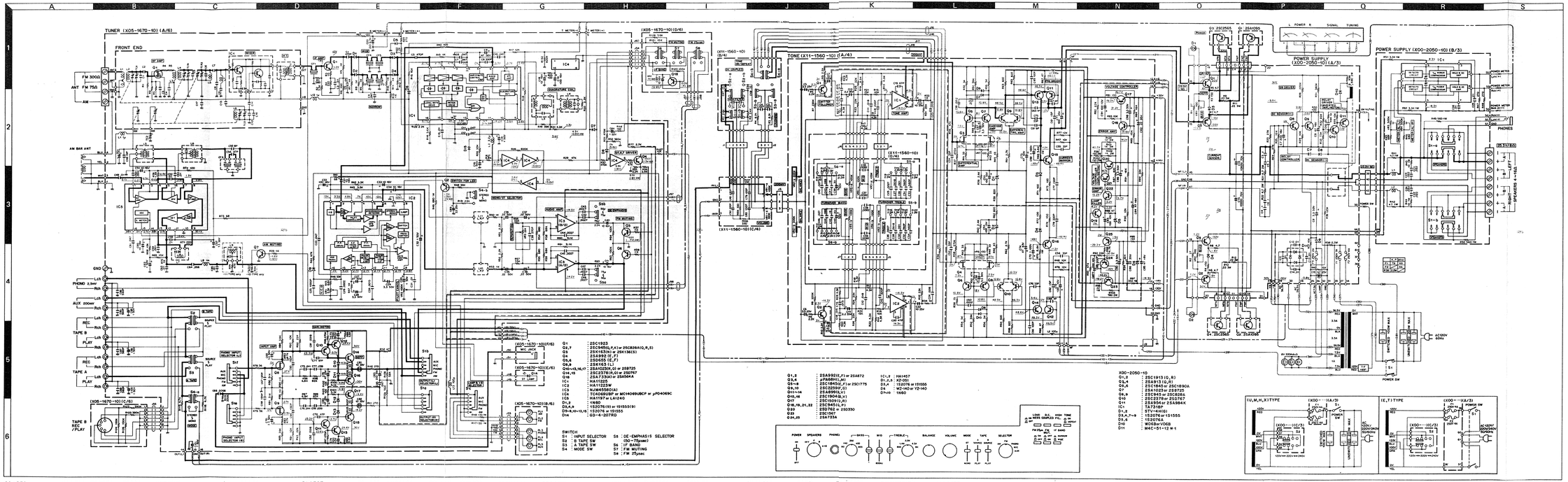

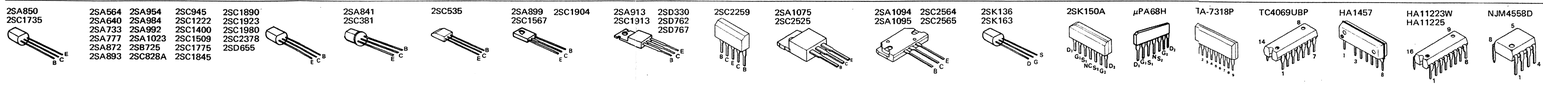

AMPLIFIER SECTION

Power Output
80 watts* per channel, minimum RMS, both channels driven at 8 ohms from 20 Hz to 20,000 Hz with no more than 0.02% total harmonic distortion.

Both Channels Driven:	
rated power into 8Ω	85W + 85W
into 4Ω at 1,000 Hz	100W + 100W
Dynamic Power Output	360W at 4Ω
Total Harmonic Distortion (20 Hz to 20,000 Hz from AUX)	
rated power into 8Ω	0.02%
1W power into 8Ω	0.007%
Intermodulation Distortion (60 Hz, 7 kHz = 4 : 1 SMPTE)	
rated power into 8Ω	0.007%
1W power into 8Ω	0.003%
Slew Rate	±20 V/μsec
Rise Time	0.9 μsec
Damping Factor	
(20 Hz ~ 20 kHz at 8Ω)	100
Input Sensitivity/Impedance	
Phono	2.5 mV/50 kΩ
AUX and TAPE	200 mV/50 kΩ
MIC	3.6 mV/50 kΩ
Signal to Noise Ratio (A weighted)	
Phono	85 dB for 2.5 mV input 91 dB for 5.0 mV input
AUX and TAPE	108 dB for 200 mV input
MIC	72 dB for 3.6 mV input
Maximum Phono Input Level at 1,000 Hz	200 mV (rms), THD 0.02%
Frequency Response	
PHONO RIAA	
Standard Curve	20 Hz to 20,000 Hz ±0.2 dB
Ultra Low TAPE	DC to 320 kHz ~ 3 dB
Tone Control	
Bass (at 250 Hz)	±12 dB at 50 Hz
Mid	±10 dB at 500 Hz
Treble (at 2.5 kHz)	±12 dB at 15 kHz
Loudness Control	
(VOL: -30 dB)	+10 dB at 100 Hz
Subsonic Filter	
DC Coupled off)	18 Hz 6 dB/oct
High Filter	5 kHz 6 dB/oct
Output Level/Impedance	
TAPE REC Out (Phono)	200 mV/300Ω
TAPE REC Out (DIN)	30 mV/80 kΩ

FM TUNER SECTION

Usable Sensitivity	10.3 dBf (1.8 μV)
50 dB Quieting Sensitivity	
Mono	18.1 dBf (3.5 μV)
Stereo	37.9 dBf (43 μV)
Signal-to-Noise Ratio at 65 dBf	
Mono	75 dB
Stereo	75 dB
	77 dB at 10 mV dBf
Total Harmonic Distortion	
Mono	0.08%
Stereo	0.09%
Frequency Response	30 Hz to 15,000 Hz +0.5, -3 dB
Capture Ratio	1.0 dB
Image Rejection Ratio	80 dB
Spurious Response Ratio	100 dB
IF Response Ratio	105 dB
Alternate Channel Selectivity	
WIDE	30 dB at 300 kHz
NARROW	60 dB at 300 kHz
AM Suppression Ratio	60 dB at 90 MHz
Stereo Separation Ratio	50 dB at 1,000 Hz 40 dB at 50 Hz to 10,000 Hz
Subcarrier Product Ratio	70 dB
Antenna Impedance	300Ω Balanced and 75Ω unbalanced
FM Frequency Range	88 MHz to 108 MHz

AM TUNER SECTION

Usable Sensitivity	10 μV (250 μV/m)
Signal to Noise Ratio	50 dB
Image Rejection	50 dB
Selectivity	50 dB

GENERAL

Power Consumption	5.3A (UL and CSA) 600W (EC) 370W (rated power at 8Ω 48W (non signal)
AC Outlet	Switched 1, Unswitched 1
Dimensions	W: 546 mm (21 1/2") H: 172 mm (6 3/4") D: 411 mm (16 3/16")
Weight (Net)	15 kg (33 lbs)
(Gross)	17.2 kg (37.9 lbs)

* Measured pursuant to Federal Trade Commission's Trade Regulation rule on Power Output Claims for Amplifier in U.S.A.

Note:
Kenwood follows a policy of continuous advancements in development. For the reason specifications may be changed without notice.

PARTS LIST

Ref. No. 参照番号	Parts No. 部品番号	Description 部品名／規格	Remarks 備考
56 3A	N09-0287-05	SCREW (DIAL BOARD)	
57 2A, 3B	N09-0293-05	SCREW (PULLEY)	
58 1B	N09-0303-05	SCREW (DIN)	
59 1A	N09-0314-05	SCREW (VARISTOR)	
60 3A	N14-0074-05	SPEED NUT	
61 3A, 3B	N29-0033-05	PUSH RIVET	
62 2B	S90-0017-05	REMOTE SWITCH SHAFT	*
63 2B	S90-0018-05	REMOTE WIRE	*
S1	S33-4012-05	LEVER SWITCH (POWER)	KP
S1	S33-4014-05	LEVER SWITCH (POWER)	UM
S1	S33-4014-05	LEVER SWITCH (POWER)	XH
S1	S33-4025-05	LEVER SWITCH (POWER)	*T
S1	S33-4025-05	LEVER SWITCH (POWER)	E
-	T90-0202-05	ANTENNA (FM)	
65 1B	T90-0083-05	ANTENNA (AM)	
Q1 ,2	V01-1095-00	2SA1095	
Q3 ,4	V03-2565-00	2SC2565	
66 1B	X00-2050-10	POWER SUPPLY PCB ASSY	*K
66 1B	X00-2050-10	POWER SUPPLY PCB ASSY	P
66 1B	X00-2050-81	POWER SUPPLY PCB ASSY	UM
66 1B	X00-2050-81	POWER SUPPLY PCB ASSY	XH
66 1B	X00-2052-71	POWER SUPPLY PCB ASSY	TE
67 2B	X05-1670-10	TUNER PCB ASSY	*K
67 2B	X05-1670-11	TUNER PCB ASSY	XT
67 2B	X05-1670-11	TUNER PCB ASSY	UM
67 2B	X05-1670-11	TUNER PCB ASSY	EH
68 2B	X11-1560-10	TONE AMP PCB ASSY	*
POWER SUPPLY (X00-2050-10)			
C1 ,2	C24-1810-51	ELECTRO 1UF 63WV	
C3 -6	C46-1710-47	MYLAR 0.1UF M	
C7	C24-1222-71	ELECTRO 220UF 16WV	
C8	C24-1733-51	ELECTRO 3.3UF 50WV	
C9	C25-1247-67	LL-ELEC 47UF 16WV	
C10 -14	C54-2710-39	CERAMIC 0.01UF P	
C15 ,16	C90-0413-05	ELECTRO 10000UF 70SV	*
C17	C46-1722-27	MYLAR 0.0022UF M	
C18	C26-1447-57	ELECTRO 4.7UF 25WV	
C21 -24	C46-1722-36	MYLAR 0.022UF K	
C25 ,26	C46-1710-36	MYLAR 0.01UF K	
100 1B	E20-0812-05	BINDING POST ASSY	
F1 ,2	F05-4022-05	FUSE (4A) X00-2050-81	
F1 ,2	F05-4024-05	FUSE (4A) X00-2052-71	
F1	F05-7022-05	FUSE (7A) X00-2050-10	
F3	F05-2021-05	FUSE (2A) X00-2050-10	
F3	F05-2023-05	FUSE (2A) X00-2050-81	
F3	F05-2029-05	FUSE (2A) X00-2052-71	
-	J13-0055-05	FUSE HOLDER	
L1 ,2	L39-0085-05	COIL	
R3 ,4	R43-1215-15	FL-PROOF RD150 J 2E	
R5 -8	R43-1247-95	FL-PROOF RD4.7 J 2E	
R9 -12	R92-0167-05	METAL 0.22 J 3D	
R17 ,18	R43-1222-15	FL-PROOF RD220 J 2E	
R21 ,22	R47-5547-95	FL-PROOF RS4.7 J 3D	
R36	R47-5568-15	FL-PROOF RS680 J 3D	
R38	R92-0173-05	RC 2 2M K 2H (2050-10)	
R41 ,42	R47-5447-95	FL-PROOF RS4.7 J 3A	
R43 ,44	R47-5410-05	FL-PROOF RS10 J 3A	

Ref. No. 参照番号	Parts No. 部品番号	Description 部品名／規格	Remarks 備考
R49 ,50	R47-5456-15	FL-PROOF RS560 J 3A	
R51 ,52	R47-5433-25	FL-PROOF RS3.3K J 3A	
VR1 ,2	R12-0056-05	TRIMMING POT (BIAS)	
VR3 ,4	R12-7007-05	TRIMMING POT (METER)	
RL1	S51-2038-05	RELAY	
S1	S90-0027-05	SLIDE SWITCH (SPKR)	*
S2	S31-2046-05	SLIDE SW X00-2050-81	
S2	S31-2046-05	SLIDE SW X00-2052-71	
D1 ,2	V11-5100-40	STV-4H(G)	
D3 ,4	V11-0271-05	1S2076 OR 1S1555	
D5 ,6	V11-0273-05	1S2076A	
D7 -9	V11-0271-05	1S2076 OR 1S1555	
D10	V11-0295-05	W06B OR V06B	
D11	V11-2101-40	M4C-51-12*1	
IC1	V30-0292-10	TA7318P	
Q1 ,2	V03-0468-05	2SC1913(Q,R)	
Q3 ,4	V01-0188-05	2SA913(Q,R)	
Q5 ,6	V03-1845-00	2SC1845 OR 2SC1890A	
Q7	V01-1023-00	2SA1023 OR 2SB725	
Q8 ,9	V03-0297-05	2SC945 OR 2SC828A	
Q10	V03-2378-00	2SC2378 OR 2SD767	
Q11	V01-0954-00	2SA954 OR 2SA984K	
TUNER (X05-1670-10)			
D14	B30-0191-05	LED (GD-4-207RD)	
PL1 -5	B30-0084-05	LAMP (8V,50MA) **FIG 102**	
C1	C52-1747-16	CERAMIC 470PF K	
C2 ,3	C55-1710-38	CERAMIC 0.01UF Z	
C4 -7	C55-1747-38	CERAMIC 0.047UF Z	
C5	C52-1747-16	CERAMIC 470PF K	
C8	C52-1733-16	CERAMIC 330PF K	
C9	C24-1747-41	ELECTRO 0.47UF 50WV	
C10 -12	C55-1747-38	CERAMIC 0.047UF Z	
C14	C24-1710-51	ELECTRO 1UF 50WV	
C15	C55-1710-38	CERAMIC 0.01UF Z	
C16	C24-1710-51	ELECTRO 1UF 50WV	
C18	C24-1210-61	ELECTRO 10UF 16WV	
C19	C24-1010-71	ELECTRO 100UF 10WV	
C20	C24-0822-71	ELECTRO 220UF 6.3WV	
C21	C24-1210-61	ELECTRO 10UF 16WV	
C22	C24-1210-71	ELECTRO 100UF 16WV	
C23	C46-1747-36	MYLAR 0.047UF K	
C24	C46-1715-26	MYLAR 0.0015UF K	
C25	C48-1710-25	POLYSTY 1000PF J	
C26	C46-1722-26	MYLAR 0.0022UF K	
C27	C24-1747-41	ELECTRO 0.47UF 50WV	
C28 ,29	C24-1733-51	ELECTRO 3.3UF 50WV	
C30	C24-1710-51	ELECTRO 1UF 50WV	
C31	C46-1710-36	MYLAR 0.01UF K	
C32	C24-1710-51	ELECTRO 1UF 50WV	
C33 ,34	C24-1210-61	ELECTRO 10UF 16WV	
C35 -38	C25-1722-47	LL-ELEC 0.22UF 50WV	
C39	C71-1727-15	CERAMIC 270PF J	
C40 ,41	C24-1210-61	ELECTRO 10UF 16WV	
C42 -47	C46-1727-25	MYLAR 0.0027UF J	
C48	C70-1715-05	CERAMIC 15PF J	
C49	C90-0245-05	CERAMIC 0.1UF M	
C50	C52-1710-26	CERAMIC 0.001UF K	
C51	C24-1210-61	ELECTRO 10UF 16WV	
C52 ,53	C90-0245-05	CERAMIC 0.1UF M	
C55	C71-1708-02	CERAMIC 8PF D	
C56	C71-1747-05	CERAMIC 47PF J	

PARTS LIST

Ref. No. 参照番号	Parts No. 部品番号	Description 部品名／規格	Remarks 備考
C81	C24-1010-71	ELECTRO 100UF 10WV	
C82	C24-6522-61	ELECTRO 22UF 35WV	
C83	C24-1010-71	ELECTRO 100UF 10WV	
C84 ,85	C24-1247-61	ELECTRO 47UF 16WV	
C86	C24-6522-61	ELECTRO 22UF 35WV	
C87	C24-1010-71	ELECTRO 100UF 10WV	
C88 -90	C24-1733-51	ELECTRO 3.3UF 50WV	
C91	C71-1709-02	CERAMIC 9PF D	
L1 ,2	L40-1011-03	INDUCTOR	
R59 ,60	R40-8382-16	RC 820 K 2H	
R63 -66	R43-5282-15	FL-PROOF RD820 J 2E	
R67 ,68	R43-1247-05	FL-PROOF RD47 J 2E	
R69 ,70	R47-5456-25	FL-PROOF RS5.6K J 3A	
R71 -74	R43-1210-15	FL-PROOF RD100 J 2E	
R81	R43-5210-15	FL-PROOF RD100 J 2E	
R87	R40-8382-16	RC 820 K 2H	
R96	R47-5422-05	FL-PROOF RS22 J 3A	
R97	R47-5433-15	FL-PROOF RS330 J 3A	
R99 ,100	R47-5515-15	FL-PROOF RS150 J 3D	
R101,102	R47-5510-25	FL-PROOF RS1K J 3D	
R103	R47-5556-15	FL-PROOF RS560 J 3D	
R124	R47-5510-25	FL-PROOF RS1K J 3D	
VR1	R08-5046-05	POTENTIOMETER(VOLUME)	*
VR2	R06-5030-05	POTENTIOMETER (BALANCE)	
VR3 -5	R13-5020-05	POTENTIOMETER (TONE)	*
VR6 ,7	R12-0502-05	TRIMMING POT 100 OFFSET	
S1 -4	S42-4010-05	PUSH SWITCH **FIG 114**	*
S5 ,6	S01-1062-05	ROTARY WAFER SWITCH	*
D1 ,2	V11-4103-60	XZ-051	
D3 ,4	V11-0271-05	1S2076 OR 1S1555	
D5	V11-4103-60	XZ-051	
D6	V11-0344-05	WZ-140 OR YZ-140	
D7 -10	V11-0051-05	1N60	
IC1 ,2	V30-0264-10	HA1457	
Q1 ,2	V01-0992-10	2SA992(F,E)OR 2SA872	
Q3 ,4	V09-0145-30	UPA68H(L,M)	
Q5 -8	V03-1845-10	2SC1845(F,E)OR 2SC1775	
Q9 ,10	V03-2259-30	2SC2259(F,G)	
Q11 -14	V01-0199-05	2SA899(B,V)	
Q15 ,16	V03-0460-05	2SC1904(B,V)	
Q17	V03-0494-05	2SC1509(Q,R)	
Q18 ,19	V03-0348-05	2SC945(Q,P)	
Q20	V04-0762-00	2SD762 OR 2SD880	
Q21 ,22	V03-0348-05	2SC945(Q,P)	
Q23	V03-1567-00	2SC1567	
Q24 ,25	V01-0733-90	2SA733(A)	

PARTS LIST

Ref. No. 参照番号	Parts No. 部品番号	Description 部品名／規格	Remarks 備考
1 2A	-	METALLIC FRAME L	
2 2B	-	METALLIC FRAME R	
3 2A	-	METALLIC FRAME C	
4 2B	-	METALLIC FRAME H	
5 3B	-	SUB PANEL	
6 1B	-	REAR PANEL	
7 2A	-	BOTTOM PLATE	
8 2B	-	PCB HOLDER	
9 2B	-	MAIN CHASSIS	
10 3A	A20-1424-03	FRONT PANEL	*K
10 3A	A20-1424-03	FRONT PANEL	PU
10 3A	A20-1424-03	FRONT PANEL	MX
10 3A	A20-1424-03	FRONT PANEL	E
10 3A	A20-1425-03	FRONT PANEL	*T
10 3A	A20-1426-03	FRONT PANEL	*H
11 3A	A33-0055-03	REFLECTOR	*
12 1A	A50-0057-03	SIDE PLATE L	*
12 1A	A50-0063-03	SIDE PLATE L	*E
13 1A	A50-0058-03	SIDE PLATE R	*
13 1A	A50-0064-03	SIDE PLATE R	*E
14 1A	A54-0171-03	WOOD TOP BOARD	*K
14 1A	A54-0171-03	WOOD TOP BOARD	UM
14 1A	A54-0171-03	WOOD TOP BOARD	XT
14 1A	A54-0171-03	WOOD TOP BOARD	H
14 1A	A54-0172-03	WOOD TOP BOARD	*E
14 1A	A54-0177-03	WOOD TOP BOARD	*P
-	B46-0055-20	WARRANTY CARD	P
-	B46-0060-00	WARRANTY CARD	T
-	B46-0061-20	WARRANTY CARD	K
-	B46-0062-20	WARRANTY CARD	U
-	B46-0063-00	WARRANTY CARD	U
-	B46-0064-00	WARRANTY CARD	X
-	B50-1859-00	INSTRUCTION MANUAL	*K
-	B50-1859-00	INSTRUCTION MANUAL	*U
-	B50-1860-00	INSTRUCTION MANUAL	*P
-	B50-1860-00	INSTRUCTION MANUAL	MX
-	B50-1861-00	INSTRUCTION MANUAL	*T
-	B50-1862-00	INSTRUCTION MANUAL	*H
-	B59-0018-00	INSTRUCTION PRINT	
15 3A	B03-0141-02	DRESSING PLATE	*
16 1A	B04-0068-04	MESH PLATE	*K
16 1A	B04-0068-04	MESH PLATE	UM
16 1A	B04-0068-04	MESH PLATE	XT
16 1A	B04-0068-04	MESH PLATE	H
16 1A	B04-0070-04	MESH PLATE	E
16 1A	B04-0073-04	MESH PLATE	P
17 3A	B07-0271-04	ESCUTCHEON	*K
17 3A	B07-0271-04	ESCUTCHEON	PU
17 3A	B07-0271-04	ESCUTCHEON	MX
17 3A	B07-0271-04	ESCUTCHEON	E
17 3A	B07-0272-04	ESCUTCHEON	*T
17 3A	B07-0282-04	ESCUTCHEON	*H
18 3A	B07-0273-04	ESCUTCHEON	*K
18 3A	B07-0273-04	ESCUTCHEON	PU
18 3A	B07-0273-04	ESCUTCHEON	MX
18 3A	B07-0273-04	ESCUTCHEON	TE
18 3A	B07-0274-04	ESCUTCHEON	*H
19 3A	B07-0275-04	ESCUTCHEON	*
20 3A	B07-0276-04	ESCUTCHEON	*
21 3A	B07-0277-04	ESCUTCHEON	*

Ref. No. 参照番号	Parts No. 部品番号	Description 部品名／規格	Remarks 備考
22 3A	B07-0278-04	ESCUTCHEON	
23 3A	B08-0006-04	INDICATOR	
24 3A	B08-2019-03	INDICATOR	*
25 3A	B10-0248-04	FRONT GLASS	*
26 3B	B19-0205-02	LIGHTING ACRYLIC RESIN	
27 3A	B20-0444-04	DIAL CALIBRARIONS	*
28 3A	B21-0033-03	DIAL POINTER	
29 3B	B30-0184-05	LAMP	
30 3B	B31-0302-05	METER	*
31 2B	D15-0171-13	PULLEY	
32 3A, 3B	D15-0172-04	PULLEY X4	
33 3B	D20-0149-03	DIAL SHAFT ASSY	*
34 1B	D32-0082-04	STOPPER (VOLTAGE)	UM
34 1B	D32-0082-04	STOPPER (VOLTAGE)	XT
34 1B	D32-0082-04	STOPPER (VOLTAGE)	EH
35 1B	E03-0008-05	AC OULET	KP
35 1B	E03-0008-05	AC OULET	UM
35 1B	E03-0017-05	AC OULET	XH
36 1B	E04-0004-05	RECEPTACLE (ANT)	TE
37 2B	E11-0060-15	PHONE JACK	
38 1B	E30-0181-05	POWER CORD	KP
38 1B	E30-0185-05	POWER CORD	X
38 1B	E30-0545-05	POWER CORD	UM
38 1B	E30-0580-05	POWER CORD	HE
38 1B	E30-0602-05	POWER CORD	T
39 1A	F01-0311-02	HEAT SINK	*
40 2B	G01-0045-24	COILED SPRING	
41 3A	G01-0364-04	COILED SPRING	
-	H01-3025-04	CARTON BOX	*K
-	H01-3025-04	CARTON BOX	UM
-	H01-3025-04	CARTON BOX	X
-	H01-3026-04	CARTON BOX	P
-	H01-3027-04	CARTON BOX	T
-	H01-3028-04	CARTON BOX	H
-	H01-3051-04	CARTON BOX	E
-	H10-1533-02	POLYSTYRENE FIXTURE	*
-	H20-0415-04	COVER	M
-	H20-0445-04	COVER	
42 2A	J02-0101-05	FOOT X4	
43 1B	J19-0507-05	ANTENNA HOLDER	
44 3B	J32-0251-04	BOSS (M7)	
45 3A	J32-0255-04	BOSS (M8)	*
46 1B	J41-0034-05	BUSHING	KP
46 1B	J42-0084-05	BUSHING	UM
46 1B	J42-0084-05	BUSHING	EH
46 1B	J42-0085-05	BUSHING	XT
47 3A	K23-0321-04	KNOB (SEL, VOL, SP)	
48 3A	K23-0322-04	KNOB (BAL, TURNOVER)	
49 3A	K23-0324-04	KNOB (TUNING)	
50 3A	K27-0093-04	KNOB (LEVER)	
51 3A	K27-0094-04	KNOB (SLIDE)	*
52 3A	K29-0319-04	KNOB (PUSH)	*
53 1A	L01-1751-05	POWER TRANSFORMER	*K
53 1A	L01-1751-05	POWER TRANSFORMER	*P
53 1A	L01-1756-05	POWER TRANSFORMER	TE
53 1A	L01-1757-05	POWER TRANSFORMER	UM
53 1A	L01-1757-05	POWER TRANSFORMER	XH
54 1A	N08-0126-05	DRESSED SCREW	
55 1B	N08-0128-35	DRESSED SCREW (GND)	

PARTS LIST

Ref. No. 参照番号	Parts No. 部品番号	Description 部品名／規格	Remarks 備考
C57	C24-1733-51	ELECTRO 3.3UF 50WV	
C58	C90-0245-05	CERAMIC 0.1UF M	
C59	C52-1710-26	CERAMIC 0.001UF K	
C60	C24-1210-61	ELECTRO 10UF 16WV	
C61	C55-1747-38	CERAMIC 0.047UF Z	
C62	C24-1710-51	ELECTRO 1UF 50WV	
C63	C90-0245-05	CERAMIC 0.1UF M	
C64	C46-1756-36	MYLAR 0.056UF K	
C65	C90-0245-05	CERAMIC 0.1UF M	
C66	C46-1768-26	MYLAR 0.0068UF K	
C67 ,68	C71-1712-15	CERAMIC 120PF J	
C69 ,70	C24-1733-51	ELECTRO 3.3UF 50WV	
C71 ,72	C71-1747-05	CERAMIC 47PF J	
C73 ,74	C24-1010-71	ELECTRO 100UF 10WV	
C75 ,76	C49-2011-34	MYLAR 0.011UF G	
C77 ,78	C49-2039-34	MYLAR 0.039UF G	
C79 ,80	C24-1447-61	ELECTRO 47UF 25WV	
C81 ,82	C90-0404-05	NP-ELEC 10UF 35WV	
C83	C24-6522-71	ELECTRO 220UF 35WV	
C84	C24-1710-51	ELECTRO 1UF 50WV	
C85 -88	C52-1756-16	CERAMIC 560PF K	
C89	C24-1433-61	ELECTRO 33UF 25WV	
C90	C24-1210-61	ELECTRO 10UF 16WV	
C91 ,92	C52-1718-26	CERAMIC 0.0018UF K	
C93 ,94	C71-1715-15	CERAMIC 150PF J	
C95	C55-1747-38	CERAMIC 0.047UF Z	
C98 -101	C24-1710-51	ELECTRO 1UF 50WV	
TC1 ,2	C05-0073-05	TRIMMER CAPACITOR	
103 1B	E06-0510-05	R/P CONNECTOR	
104 3B	E11-0065-05	PHONE JACK	
105 2B	E13-0612-05	PHOND JACK (6P)	
106 2B	E20-0438-05	TERMINAL BOARD (ANT)	
CF1 -5	L79-0085-05	FILTER ASSY	
CF6	L72-0078-05	CERAMIC FILTER	
L1	L40-1092-11	INDUCTOR	
L2	L40-2292-44	INDUCTOR	
L3	L30-0327-05	FM IFT	
L4	L30-0328-05	FM IFT	
L5	L32-0225-05	AM OSCILLATING COIL	
L6	L30-0329-05	AM IFT	
L7	L30-0284-05	AM IFT	
L8	L40-1021-03	INDUCTOR	
L9	L79-0073-05	LC FILTYER X05-1670-11	
L10 ,11	L79-0060-05	FILTER	
L12	L40-1092-11	INDUCTOR	
L13	L40-1011-12	INDUCTOR	
R6	R43-1210-15	FL-PROOF RD100 J 2E	
R41	R43-1268-05	FL-PROOF RD68 J 2E	
R49	R47-5468-15	FL-PROOF RS680 J 3A	
R73	R43-1268-05	FL-PROOF RD68 J 2E	
R77	R47-5427-25	FL-PROOF RS2.7K J 3A	
R96 ,97	R48-2680-14	RN 6.8K G 2E	
R98 ,99	R48-2820-24	RN 82K G 2E	
R104-107	R43-1233-05	FL-PROOF RD33 J 2E	
R112	R43-1247-05	FL-PROOF RD47 J 2E	
R117-119	R47-5413-15	FL-PROOF RS130 J 3A	
VR1	R12-1041-05	TRIMMING POT 3.3K VCO	
VR2	R12-5030-05	TRIMMING POT 100K	
VR3	R12-3051-05	TRIMMING POT 22K PILOT	
S1	S29-1119-05	ROTARY WAFER SW (SEL)	*
S2 ,3	S33-2052-05	LEVER SWITCH (TAPE)	
S4	S33-4023-05	LEVER SWITCH (MODE)	
S5	S31-2052-05	SLIDE SWITCH(EMPHASIS)	*
S6 -8	S42-3028-05	PUSH SWITCH **FIG 110**	*
D1 ,2	V11-0051-05	1N60	
D3 -13	V11-0271-05	1S2076 OR 1S1555	
D15	V11-0271-05	1S2076 OR 1S1555	
IC1	V30-0321-10	HA11225	
IC2	V30-0266-20	HA11223W	
IC3	V30-0248-10	NJM4558D(A)	
IC4	V30-0297-20	TC4069UBP OR UPD4069C	
IC4	V30-0297-20	TC4069UBP,MC14069UBCP	
IC5	V30-0196-05	HA1197 OR LA1240	
Q1	V03-1923-00	2SC1923	
Q2	V03-0945-40	2SC945(Q,P,K),2SC828A	
Q3	V09-0144-40	2SK163(N) OR 2SK136(S)	
Q4	V01-0992-10	2SA992(F,E)	
Q5 ,6	V04-0655-20	2SD655(E,F)	
Q7	V03-0945-40	2SC945(Q,P,K),2SC828A	
Q8 ,9	V09-0144-60	2SK163(L)	
Q10 -13	V01-1023-10	2SA1023(R,Q)OR2SB725	
Q14 ,15	V03-2378-10	2SC2378(R,Q)OR 2SD767	
Q16 ,17	V01-1023-10	2SA1023(R,Q)OR 2SB725	
Q18	V01-0733-90	2SA733(A)OR 2SA564A	
TONE AMP (X11-1560-10)			
C1 ,2	C46-1710-36	MYLAR 0.01UF K	
C3 ,4	C46-1727-36	MYLAR 0.027UF K	
C5 ,6	C25-1433-57	LL-ELEC 3.3UF 25WV	
C7 ,8	C25-1410-67	LL-ELEC 10UF 25WV	
C9 ,10	C71-1722-15	CERAMIC 220PF J	
C11 ,12	C46-1718-36	MYLAR 0.018UF K	
C13 ,14	C25-6522-57	LL-ELEC 2.2UF 35WV	
C15 -18	C46-1715-35	MYLAR 0.015UF J	
C19 ,20	C71-1747-05	CERAMIC 47PF J	
C21 ,22	C25-1410-67	LL-ELEC 10UF 25WV	
C23 ,24	C52-1718-26	CERAMIC 0.0018UF K	
C25 ,26	C46-1727-26	MYLAR 0.0027UF K	
C27 ,28	C46-1718-26	MYLAR 0.0018UF K	
C29 ,30	C46-1710-26	MYLAR 0.001UF K	
C31 ,32	C52-1739-16	CERAMIC 390PF K	
C33 ,34	C52-1756-16	CERAMIC 560PF K	
C35 -38	C46-1782-25	MYLAR 0.0082UF J	
C39 ,40	C25-1733-47	LL-ELEC 0.33UF 50WV	
C41 ,42	C46-1718-46	MYLAR 0.18UF K	
C43 ,44	C46-1768-36	MYLAR 0.068UF K	
C45 ,46	C46-1727-36	MYLAR 0.027UF K	
C47 ,48	C46-1715-46	MYLAR 0.15UF K	
C49 ,50	C71-1722-15	CERAMIC 220PF J	
C51 ,52	C71-1733-05	CERAMIC 33PF J	
C53 ,54	C24-1010-71	ELECTRO 100UF 10WV	
C55 ,56	C71-1733-05	CERAMIC 33PF J	
C57 ,58	C24-1733-51	ELECTRO 3.3UF 50WV	
C59 ,60	C46-1712-26	MYLAR 0.0012UF K	
C61 ,62	C71-1715-05	CERAMIC 15PF J	
C63	C71-1701-01	CERAMIC 1PF C	
C65 ,66	C71-1710-15	CERAMIC 100PF J	
C67 ,68	C71-1704-01	CERAMIC 4PF C	
C69 ,70	C24-2010-51	ELECTRO 1UF 100WV	
C71 ,72	C24-1010-71	ELECTRO 100UF 10WV	
C73 ,74	C24-1847-61	ELECTRO 47UF 63WV	
C75 ,76	C71-1733-05	CERAMIC 33PF J	
C77 ,78	C71-1722-15	CERAMIC 220PF J	
C79 ,80	C71-1710-15	CERAMIC 100PF J	

EXPLODED VIEW

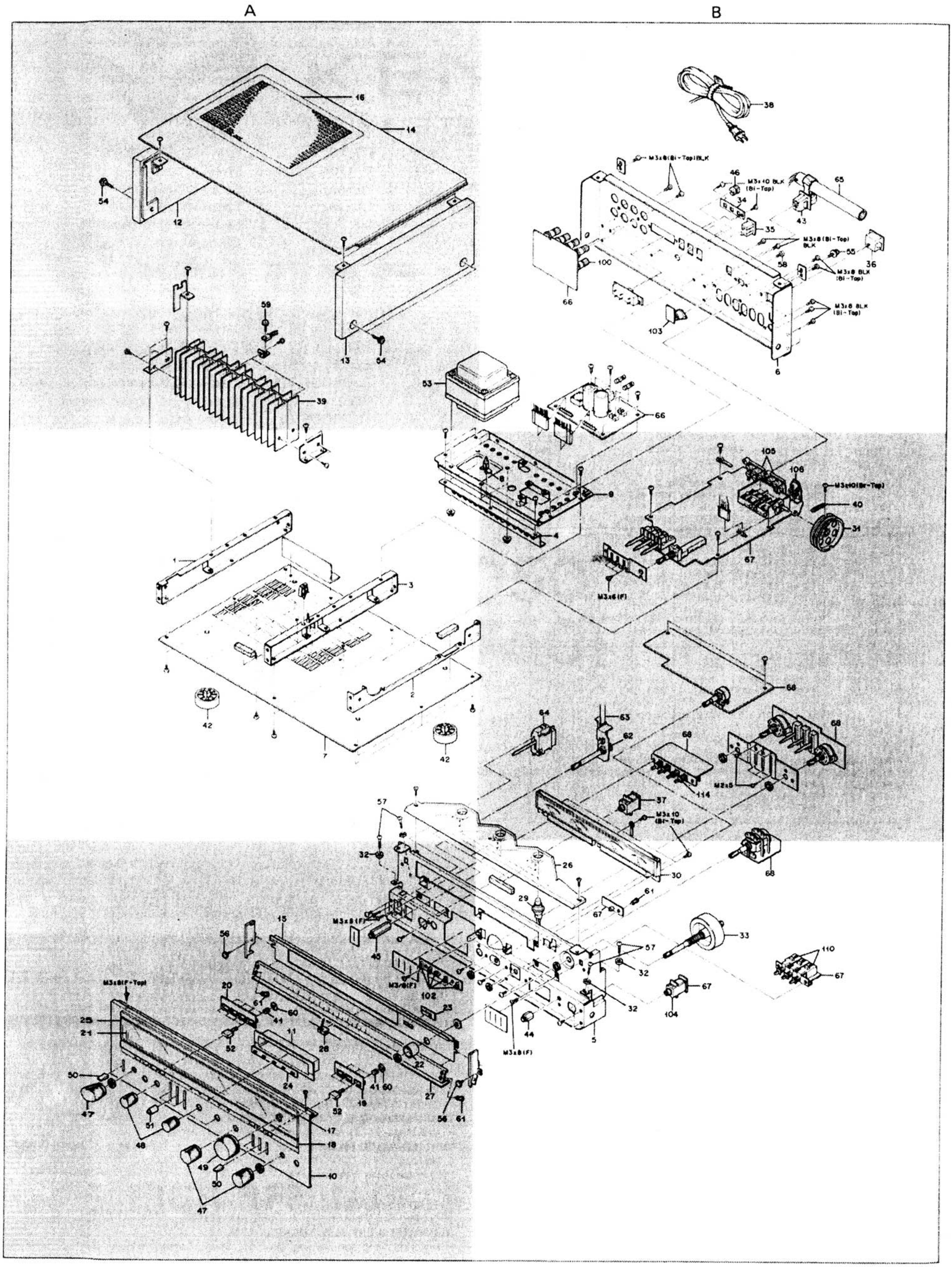

PARTS LIST

Fig. No.	Parts No.
M3 × 6	N30-3006-46
M3 × 6 BLK	N30-3006-45
M3 × 6 (F-Tap) BLK	N88-3006-45
M3 × 8 BLK	N30-3008-45
M3 × 8 (Br-Tap)	N87-3008-46
M3 × 8 (F-Tap)	N88-3008-46
M3 × 8 (Bi-Tap) BLK	N89-3008-45
M3 × 8 (Tp-T)	N91-3008-46
M3 × 10 (Br-Tap)	N87-3010-46
M3 × 10 (F-Tap)	N88-3010-46
M4 × 10 (Br-Tap)	N87-4010-46

INSTRUCTIONS FOR PARTS LIST

Ref. No. 参照番号	Parts No. 部品番号	Description 部品名／規格	Remarks 備考
11 1A	A01-0352-02	CASE	*
12 3A	A20-1402-03	FRONT PANEL	*K
12 3A	A20-1402-03	FRONT PANEL	FU
12 3A	A20-1402-03	FRONT PANEL	MW
12 3A	A20-1402-03	FRONT PANEL	L
12 3A	A20-1403-03	FRONT PANEL	T
13 1A	A50-0059-02	SIDE PLATE (L)	*
14 1A	A50-0060-02	SIDE PLATE (R)	*
15 1A	A54-0169-02	WOOD TOP BOARD	*
C31 -38	C91-0039-05	MYLAR 0.1UF J	
C39 ,40	C24-1410-61	ELECTRO 10UF 25WV	
C41 ,42	C46-1712-26	MYLAR 0.0012UF J	
C43 ,44	C24-1710-51	ELECTRO 1UF 50WV	
C45	C25-6547-67	ELECTRO 47UF 35WV	
C46	C24-2010-51	ELECTRO 1UF 100WV	
C47	C71-1727-15	CERAMIC 270PF J	
110 2B	F05-6024-05	FUSE (4A) F1-4	LF
110 2B	F05-6024-05	FUSE (8A) F1-4	UM
110 2B	F05-6222-05	FUSE (6.3A) F1-4	TW
110 2B	F05-6322-05	FUSE (6.3A) F1-4	L
111 2B	J13-0055-05	FUSE HOLDER	
L1 ,2	L39-0085-05	COIL	
R5 ,6	R43-1227-25	FL-PROOF RD2.7K J 2E	
R17 ,18	R43-1247-25	FL-PROOF RD4.7K J 2E	
R23 ,24	R43-1210-15	FL-PROOF RD100 J 2E	
R25 -28	R43-1222-15	FL-PROOF RD220 J 2E	
R29 ,30	R47-1412-35	FL-PROOF RS12K J 3A	

① Exploded view drawing No.
② Position in exploded view.
③ Symbol of new parts.
④ Area to which parts are shipped. Example: A20-1402-03 is the parts No. of FRONT PANEL ASS'Y for the "K" type products (for USA).
When this column is blank, it means that the same type of parts (same parts No.) are used for the products shipped to all areas.
⑤ Reference No. in schematic diagram.
⑥ Abbreviation of "ceramic capacitor".
All capacitors and resistors are listed using abbreviations.

⑦ Abbreviations

* Abbreviations of capacitors (Parts No. with initial letter "C")

ELECTRO	Electrolytic capacitor
LL-ELEC	Low leak electrolytic capacitor
NP-ELEC	Non-pole electrolytic capacitor
MICA	Mica capacitor
POLYSTY	Polystyrene capacitor
MYLAR	Mylar capacitor
CERAMIC	Ceramic capacitor
TANTAL	Tantalum capacitor
MF	Metallized film capacitor
OIL	Oil capacitor

The unit "UF" is used in lieu of "μF"

* Abbreviations of resistors (Parts No. with initial letters "R").

RC	Carbon composition resistor
RD	Carbon film resistor
FL-PROOF RD	Flame-proof carbon film resistor
RW	Wire wound power resistor
FL-PROOF RS	Flame-proof metal oxide film resistor
RN	Metal film resistor
2B	Rated wattage 1/8W
2E	Rated wattate 1/4W
2H	Rated wattage 1/2W
3A	Rated wattage 1W
3D	Rated wattage 2W
3F	Rated wattage 3W
3G	Rated wattage 4W
3H	Rated wattage 5W

All resistor values are indicated with the unit (Ω) omitted.

* Abbreviations common to capacitors and resistors

C	±0.25 pF (Used for capacitors only)
D	±0.5 pF (Used for capacitors only)
F	±1%
G	±2%
J	±5%
K	±10%
M	±20%
Z	+80%, −20% (Used for capacitors only)
P	+100%, −0% (Used for capacitors only)

⑧ Resistors RD (carbon composition resistors) are not listed in the parts list. For values, refer to the schematic diagram.

A product of
TRIO-KENWOOD CORPORATION
6-17, 3-chome, Aobadai, Meguro-ku, Tokyo 153, Japan

KENWOOD ELECTRONICS, INC.
1315 E. Watsoncenter Rd, Carson, California 90745
75 Seaview Drive, Secaucus, New Jersey 07094, U.S.A.
TRIO-KENWOOD ELECTRONICS, N.V.
Leuvensesteenweg 504 B-1930 Zaventem, Belgium
TRIO-KENWOOD ELECTRONICS GmbH
Rudolf-Braas-Str. 20, 6056 Heusenstamm, West Germany
TRIO-KENWOOD FRANCE S.A.
5, Boulevard Ney, 75018 Paris, France
TRIO-KENWOOD SVENSKA AB
Kemistvagen 10A, S-183 21 Taby, Sweden
TRIO-KENWOOD (AUSTRALIA) PTY. LTD.
30 Whiting St., Artarmon, N.S.W. 2064, Australia
KENWOOD & LEE ELECTRONICS, LTD.
Room 501, Wang Kee Building, 5th Floor, 34-37, Connaught Road, Central, Hong Kong

1979-5 PRINTED IN JAPAN (G) 3,697 B51-0608-00